Greenhouse Gas Reduction Analysis
City of Eugene

November 6, 2017 | Solarc Energy Group

Submitted to:
City of Eugene

Prepared by:
SOLARC Energy Group
1158 High Street
Eugene, OR, 97401
Phone: 541-349-0966

DRAFT REPORT

Greenhouse Gas Reduction Analysis of Cost

City of Eugene

November 6, 2017

Presented to:

Lynne Eichner and Mike Penwell

City of Eugene

Presented by:

Solarc Energy Group LLC

Contact Information

City of Eugene Representatives

Mike Penwell

Principal Facilities Project Manager
City of Eugene, Facility Management Division
Phone: 541.682.5547
Email: Michael.J.Penwell@ci.eugene.or.us

Lynne Eichner

Sustainable Operations Analyst
City of Eugene, Facility Management Division
Phone: 541.682.5083
Email: Lynne.M.Eichner@ci.eugene.or.us

Energy Analysts

Solarc Energy Group

Michael J. Hatten PE, Principal

Phone: 541.349.0966
Email: mikeh@solarcenergygroup.com

Devon Guyette, Energy Analyst

Phone: 541.349.0966

Email: devong@solarenergygroup.com

Erika Willis, Energy Analyst

Phone: 541.349.0966
Email: erikaw@solarenergygroup.com

Table of Contents

1.0 Executive Summary 5

1.1. Compliance Scenarios 5

1.2. Primary Compliance Scenario Cost and Budget Summary 6

1.3. Guide to Using This Report 12

2.0 Study Buildings 13

3.0 Greenhouse Gas Reduction Measures 14

3.1. Re-Commissioning (ReCx) of Natural Gas Equipment 15

3.2. Boiler Replacement for Swimming Pool Heating Water Systems 17

3.3. Solar Thermal Heating Water System Addition for Swimming Pools 21

3.4. Solar Thermal Heating Water System Retrofit for Swimming Pools 22

3.5. Boiler Replacement for Building Heating Water Systems 23

3.6. Packaged Gas-Pack Roof Top Unit Replacement 25

3.7. Natural Gas Furnace Replacement 26

3.8. Variable Refrigerant Flow System Retrofit 28

3.9. Swimming Pool Heat Pump Domestic Hot Water (DHW) System Retrofit 30

3.10. High Use Heat Pump Domestic Hot Water System Retrofit 32

3.11. Low Use Heat Pump Domestic Hot Water System Retrofit 34

3.12. Solar Thermal Domestic Hot Water System Installation 36

3.13. Solar Thermal Domestic Hot Water System Retrofit 37

4.0 Greenhouse Gas Emissions Factors 39

4.1. Carbon Footprint Calculations 39

5.0 Appendix 40

ABBREVIATIONS

AHU	Air Handling Unit
ATAC	Allied Technical Assistance Contractor
BTU	British Thermal Unit
C02	Carbon Dioxide
CRO	Climate Reduction Ordinance
CV	Constant Volume
DDC	Direct Digital Control(s)
DHW	Domestic Hot Water
dT	Delta T (temperature difference)
DOAS	Dedicated Outside Air System
DX	Direct Expansion
EEM	Energy Efficiency Measure
EAD	Exhaust Air Damper
EUI	Energy Use Index
EF	Exhaust Fan
ETO	Energy Trust of Oregon
F	Fahrenheit
GHG	Greenhouse Gas
HC	Heating Coil
HD	Hot Deck
hr	Hour
HVAC	Heating Ventilating & Air Conditioning
HVU	Heating and Ventilating Unit
HW	Heating Water
HX	Heat Exchanger
kW	Kilowatts
kWh	Kilowatt-hours
LCCA	Life Cycle Cost Analysis
MBH	kBtu/hr
MT	Metric Ton
MZ	Multi-zone
MZU	Multi-Zone Unit
OAT	Outside Air Temperature
ReCx	Re-Commissioning
RTU	Rooftop (Packaged) Unit
sf	Square Feet
SF	Supply Fan
SP	Setpoint
TAS	Technical Analysis Study
TMV	Thermostatic Mixing Valve
TU	Terminal Unit
VAV	Variable Air Volume
VFD	Variable Frequency Drive
VRF	Variable Refrigerant Flow
W	Watts

1.0 Executive Summary

This report summarizes the results of a cost and budget analysis for a number of investment scenarios that represent building-focused compliance with the City of Eugene Climate Reduction Ordinance (Council Ordinance No. 20567).

The ordinance concerns a set of climate action goals to reduce greenhouse gas (GHG) emissions for all City-owned facilities and City operations. This cost study focuses on the emissions associated with buildings that are managed by the City of Eugene Facility Management Division (or have otherwise been identified as relevant buildings for the purposes of this cost study). This report defines three primary building investment scenarios, comprised of different GHG reduction measure categories that meet Goals 1 and 2 of section 6.675 (Figure 1). All scenarios discussed in this report start from and build upon baseline GHG conditions for 2010 and 2016.

Figure 1. City of Eugene Climate Recovery Ordinance.

Section 6.675: Climate Recovery – Climate Action Goals. The city shall carry out the requirements of section 6.680 through 6.690 of this code in order to achieve the following goals:

1. *By the year 2020, all city-owned facilities and city operations shall be carbon neutral, either by reducing greenhouse gas emissions to zero, or, if necessary, by funding of verifiable local greenhouse gas reduction projects and programs or the purchase of verifiable carbon offsets for any remaining greenhouse gas emissions.*
2. *By the year 2030, the city organization shall reduce its use of fossil fuels by 50% compared to 2010 usage.*
3. *By the year 2030, all businesses, individuals and others living or working in the city collectively shall reduce the total (not per capita) use of fossil fuels by 50% compared to 2010 usage.*
4. *By the year 2100, total community greenhouse gas emissions shall be reduced to an amount that is no more than the city of Eugene's average share of a global atmospheric greenhouse gas level of 350 ppm, which is estimated in 2016 to require an annual average emission reduction level of 7.6%.*

(Section 6.675 added by Ordinance No. 20540, enacted July 28, 2014, effective August 29, 2014; and amended by Ordinance No. 20567, enacted July 27, 2016, effective August 28, 2016.)

To establish a basis of cost analysis consistent with the language of the ordinance and discussions with City staff, GHG reduction goals for relevant buildings have been defined as follows:

- 2020 Goal: Reduce GHG emissions by 60% relative to 2010.
- 2030 Goal: Reduce fossil fuel use (on-site) by 50% relative to 2010 (considering on-site gas use and on-site steam used in 2010).

1.1. Compliance Scenarios

Three primary compliance scenarios have been defined as bases for this cost and budget analysis. These scenarios are comprised of different combinations of GHG reduction measure categories, documented in interim reports delivered over the course of this analysis. Those reports documented the likely reliance on GHG offsets to achieve compliance with the 2020 goal, and the reliance on natural gas use reduction strategies to achieve compliance with the 2030 goal. Primary compliance scenarios discussed in previous reports and ongoing meetings, and documented in this report are listed below.

1. **Scenario 1 – Lowest First Cost Path**: This represent the path which achieves the 2030 goal with the least first cost.

   CO2 Reduction Strategies**:**

   Natural Gas ReCx
   Pool DHW Retrofit
   Gas Pack Retrofit
   Retro Solar Thermal Hot Water (Pool)
   Heat Pump Water Heating (Pools)

2. **Scenario 2 – Lowest Number of Projects Path**: This represents the path which achieves the 2030 goal with the fewest number of projects.

   CO2 Reduction Strategies:
   - Natural Gas ReCx
   - Heat Pump Water Heating (Pools)
   - Boiler Replacement
   - New Solar Thermal Hot Water (Pool)

3. **Scenario 3 – Lowest Risk Path**: This represents the path which achieves the 2030 goal with the least amount of new types of equipment and technology the current staff is not currently trained to operate and maintain.

   CO2 Reduction Strategies:
   - Natural Gas ReCx
   - Furnace Retrofit
   - Gas Pack Retrofit
   - VRF Retrofit
   - New Solar Thermal DHW
   - Retro Solar Thermal DHW
   - New Solar Thermal Hot Water (Pool)
   - Retrofit Solar Thermal Hot Water (Pool)
   - Pool DHW Retrofit

The costs associated with these (3) paths were assembled and run through a high-level Life Cycle Cost Analysis (LCCA) to develop overall compliance costs, in 2017 dollars per metric ton equivalent (MTe) of reduced GHG emissions. Table 1 is a summary of the LCCA results.

Table 1 – Greenhouse Gas Reduction Strategy Life Cycle Cost Analysis Results

	Scenario 1	Scenario 2	Scenario 3
Total First Cost (non-discounted $)	($6,955,351)	($11,842,561)	($8,014,019)
Total Annual Operations Cost (non-discounted $) [1]	($3,255,718)	($3,792,710)	($1,518,929)
Total Annual Energy Cost Savings (non-discounted $)	$1,588,334	$1,415,577	$97,184
Net Present Value (2017 $)	($5,811,751)	($10,778,385)	($5,796,051)
Annual GHG Savings in Metric Tons	1,073	1,135	1,079
Total GHG Savings in Metric Tons (over 23 years)	18,135	19,033	20,681
Net Present Cost Per Metric Ton	**($320)**	**($566)**	**($280)**

[1] Operations costs include cost of maintenance staff, re-commissioning, and carbon offsets.

1.2. Primary Compliance Scenario Cost and Budget Summary

None of the scenarios listed fit into the overall cost results generally exhibited by numerous GHG reduction cost analyses, represented by the McKinsey curve (See Appendix 5.7 for additional information on the McKinsey Curve) and other similar analyses. The costs associated with these scenarios are much higher than generalized studies due to the following reasons.

- Not all GHG reduction strategies translate to energy cost savings strategies. Many are fuel switch strategies involving displacement of natural gas-using systems with electric-drive heat pumping. Note that the electricity purchased from Eugene Water and Electric Board (EWEB) is almost carbon neutral.
- Many energy efficient systems involving natural gas consumption were already installed as part of the close-down of the EWEB steam system. The GHG emissions reductions associated with these investments were part of the baseline analysis and not considered in the cost analysis.
- Ongoing cost of added staff to maintain the increased number of installed heat pump systems was considered important to include in the operations costing of all scenarios. This increased operating cost largely offset annual energy cost savings.
- Non-energy benefits associated with re-commissioning on building systems have not been given dollar values or formally accounted in the economic analysis results. For some buildings, non-energy benefits (associated with improved acoustics, improved comfort, reduced maintenance and repair, and avoided future costs) could be substantial.

The year-by-year budget planning profiles for the three primary cost scenarios are summarized in Table 2.

Table 2 – Year-by-year Budget Summaries

Year	OPTION 1 - Lowest First Cost		OPTION 2 - Lowest Number of Projects		OPTION 3 - Lowest Risk	
	Capital Budget Net Cost (future $)	Operations Budget Net Cost (future $)	Capital Budget Net Cost (future $)	Operations Budget Net Cost (future $)	Capital Budget Net Cost (future $)	Operations Budget Net Cost (future $)
2018	$ (3,649)	$ (39,562)	$ -	$ (44,107)	$ (3,332)	$ (43,226)
2019	$ -	$ (32,430)	$ -	$ (36,998)	$ -	$ (39,904)
2020	$ (165,364)	$ (43,887)	$ (1,556,139)	$ (158,403)	$ (514,771)	$ (54,838)
2021	$ (168,175)	$ (35,498)	$ (1,476,889)	$ (151,246)	$ (395,218)	$ (55,637)
2022	$ (307,994)	$ (27,000)	$ (441,880)	$ (126,391)	$ (523,460)	$ (46,931)
2023	$ (354,529)	$ (17,377)	$ (1,700,143)	$ (120,068)	$ (604,666)	$ (38,821)
2024	$ (127,617)	$ (9,328)	$ (777,280)	$ (117,895)	$ (689,601)	$ (31,485)
2025	$ (1,809,802)	$ (114,575)	$ (1,809,802)	$ (110,727)	$ (1,212,279)	$ (28,562)
2026	$ (303,432)	$ (108,369)	$ (375,477)	$ (104,807)	$ (795,814)	$ (19,446)
2027	$ (1,427,883)	$ (102,202)	$ (1,427,883)	$ (107,680)	$ (1,086,103)	$ (12,141)
2028	$ (422,944)	$ (101,336)	$ (413,105)	$ (106,431)	$ (691,885)	$ 4,731
2029	$ (1,863,963)	$ (94,980)	$ (1,863,963)	$ (106,011)	$ (1,496,890)	$ 6,508
2030	$ -	$ (67,116)	$ -	$ (78,488)	$ -	$ 35,887
2031	$ -	$ (70,569)	$ -	$ (82,288)	$ -	$ 33,975
2032	$ -	$ (74,095)	$ -	$ (86,170)	$ -	$ 32,013
2033	$ -	$ (77,697)	$ -	$ (90,135)	$ -	$ 30,001
2034	$ -	$ (81,375)	$ -	$ (94,185)	$ -	$ 27,937
2035	$ -	$ (85,132)	$ -	$ (98,321)	$ -	$ 25,820
2036	$ -	$ (88,968)	$ -	$ (102,545)	$ -	$ 23,650
2037	$ -	$ (92,886)	$ -	$ (106,858)	$ -	$ 21,425
2038	$ -	$ (96,887)	$ -	$ (111,263)	$ -	$ 19,144
2039	$ -	$ (100,972)	$ -	$ (115,761)	$ -	$ 16,805
2040	$ -	$ (105,143)	$ -	$ (120,354)	$ -	$ 14,408
Total	**$ (6,955,351)**	**$ (1,667,384)**	**$ (11,842,561)**	**$ (2,377,134)**	**$ (8,014,019)**	**$ (78,684)**

Tables 3 through 5 summarize the GHG emissions reductions by measure category for each scenario to reach the 2020 and 2030 goals through reduced real emissions by 2030. The corresponding costs of each scenario's measure categories are shown in figures 2 through 4. (Note that it is assumed that carbon offsets will be purchased in the interim to satisfy the 2020 goals by 2020.)

In the cost graphs, the width of the measure category bar represents the measure's overall contribution to emissions reduction. The relative length of the bar represents the measure's life cycle cost, in dollars per MTe of emissions reduced. Positive costs represent a net present *savings*. Negative costs represent a net present *cost*.

Table 3 – Scenario 1 – Lowest First Cost Path

	Annual Electric GHG (MT CO2)	Annual Natural Gas GHG (MT CO2)	Annual Steam GHG (MT CO2)	Annual Total GHG (MT CO2)
2010 Building Energy-related Emissions	**455**	**2,171**	**609**	**3,235**
2016 Building Energy-related Emissions	**219**	**2,149**	**0**	**2,367**
CO2 Reduction Strategies	Annual Electric GHG Savings (MT CO2)	Annual Natural Gas GHG Savings (MT CO2)	Annual Steam GHG Savings (MT CO2)	Annual Total GHG Savings (MT CO2)
Natural Gas ReCx	7	328	0	335
Pool DHW Retrofit	(4)	189	0	184
Gas Pack Retrofit	(3)	112	0	110
Retro Solar Thermal Hot Water (Pool)	0	41	0	41
Heat Pump Water Heating (Pools)	(9)	412	0	403
Projected 2030 Energy-related Emissions	**228**	**1,067**	**0**	**1,295**
Greenhouse Gas Reduction	**50%**	**51%**	**100%**	**60%**

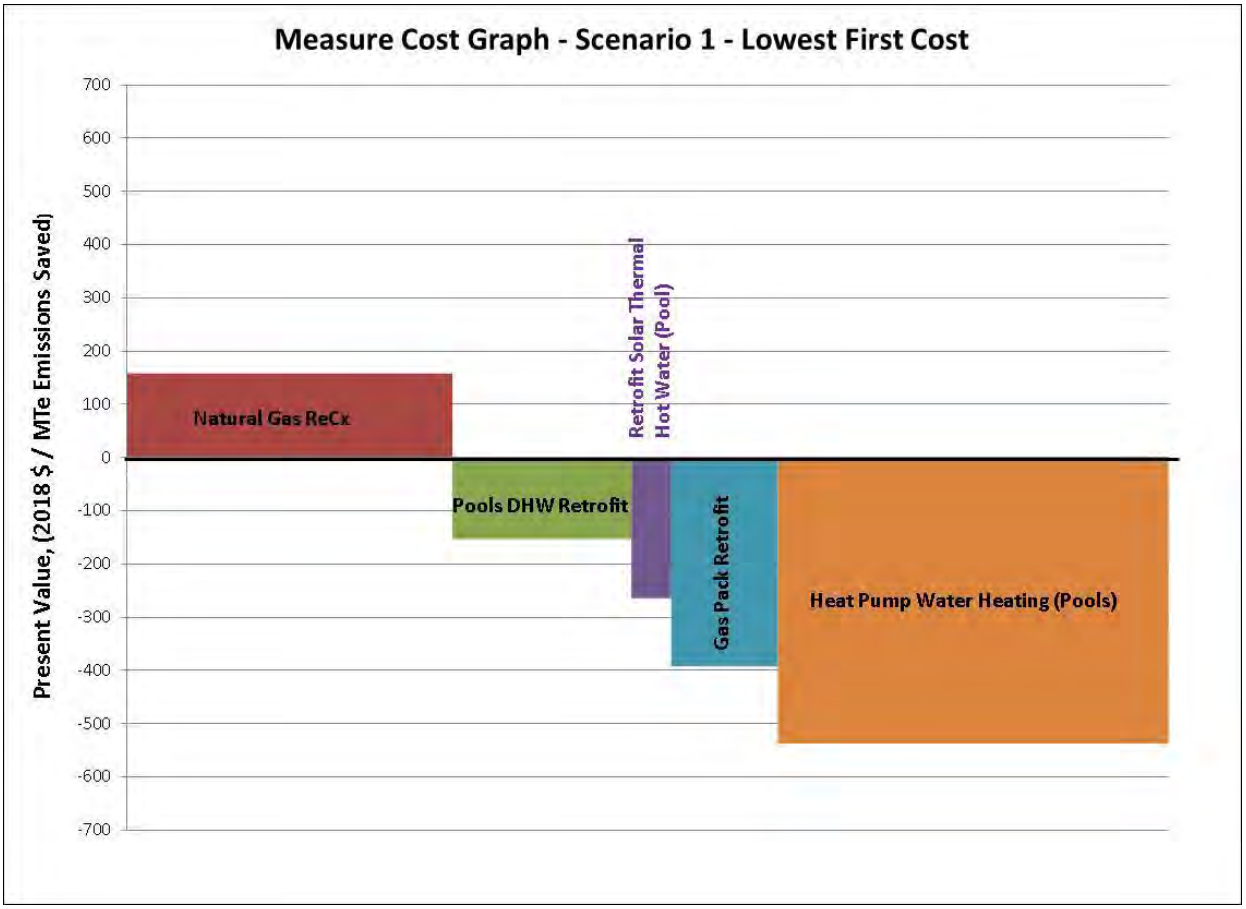

Figure 2 - Scenario 1 Measure Cost Graph

Table 4 – Scenario 2 – Lowest Number of Projects Path

	Annual Electric GHG (MT CO2)	Annual Natural Gas GHG (MT CO2)	Annual Steam GHG (MT CO2)	Annual Total GHG (MT CO2)
2010 Building Energy-related Emissions	**455**	**2,171**	**609**	**3,235**
2016 Building Energy-related Emissions	**219**	**2,149**	**0**	**2,367**
CO2 Reduction Strategies	Annual Electric GHG Savings (MT CO2)	Annual Natural Gas GHG Savings (MT CO2)	Annual Steam GHG Savings (MT CO2)	Annual Total GHG Savings (MT CO2)
Natural Gas ReCx	7	328	0	335
Heat Pump Water Heating (Pools)	(9)	412	0	403
Boiler Replacement	(7)	295	0	289
New Solar Thermal Hot Water (Pool)	0	109	0	109
Projected 2030 Energy-related Emissions	**228**	**1,005**	**0**	**1,232**
Greenhouse Gas Reduction	**50%**	**54%**	**100%**	**62%**

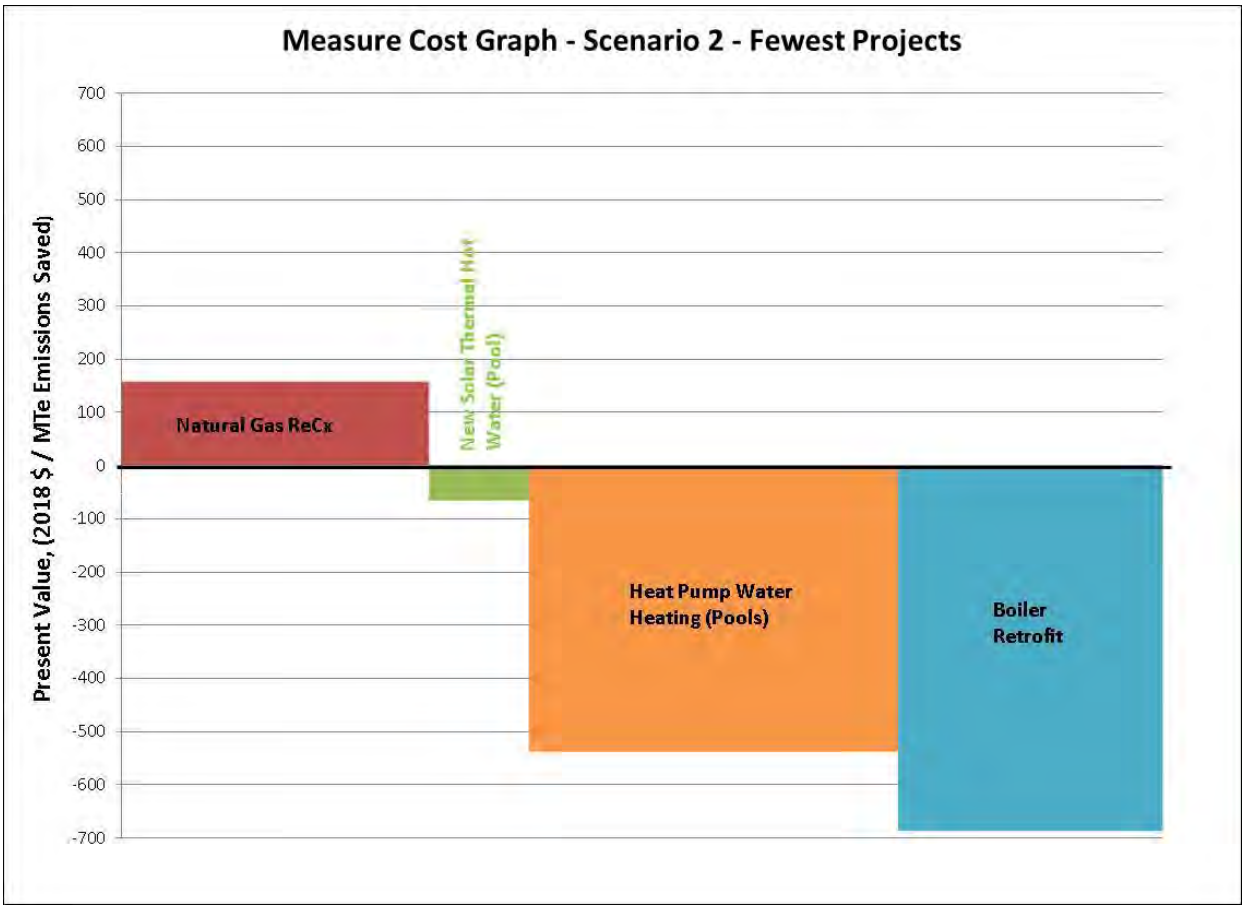

Figure 3 - Scenario 2 Measure Cost Graph

Table 5 – Scenario 3 – Lowest Risk Path

	Annual Electric GHG (MT CO2)	Annual Natural Gas GHG (MT CO2)	Annual Steam GHG (MT CO2)	Annual Total GHG (MT CO2)
2010 Building Energy-related Emissions	**455**	**2,171**	**609**	**3,235**
2016 Building Energy-related Emissions	**219**	**2,149**	**0**	**2,367**
CO2 Reduction Strategies	Annual Electric GHG Savings (MT CO2)	Annual Natural Gas GHG Savings (MT CO2)	Annual Steam GHG Savings (MT CO2)	Annual Total GHG Savings (MT CO2)
Natural Gas ReCx	7	328	0	335
Furnace Retrofit	(5)	238	0	232
Gas Pack Retrofit	(3)	112	0	110
VRF Retrofit	(2)	109	0	107
New Solar Thermal DHW	0	5	0	5
Retro Solar Thermal DHW	0	4	0	4
New Solar Thermal Hot Water (Pool)	0	46	0	46
Retro Solar Thermal Hot Water (Pool)	0	42	0	42
Pool DHW Retrofit	(5)	203	0	199
Projected 2030 Energy-related Emissions	**227**	**1,062**	**0**	**1,288**
Greenhouse Gas Reduction	**50%**	**51%**	**100%**	**60%**

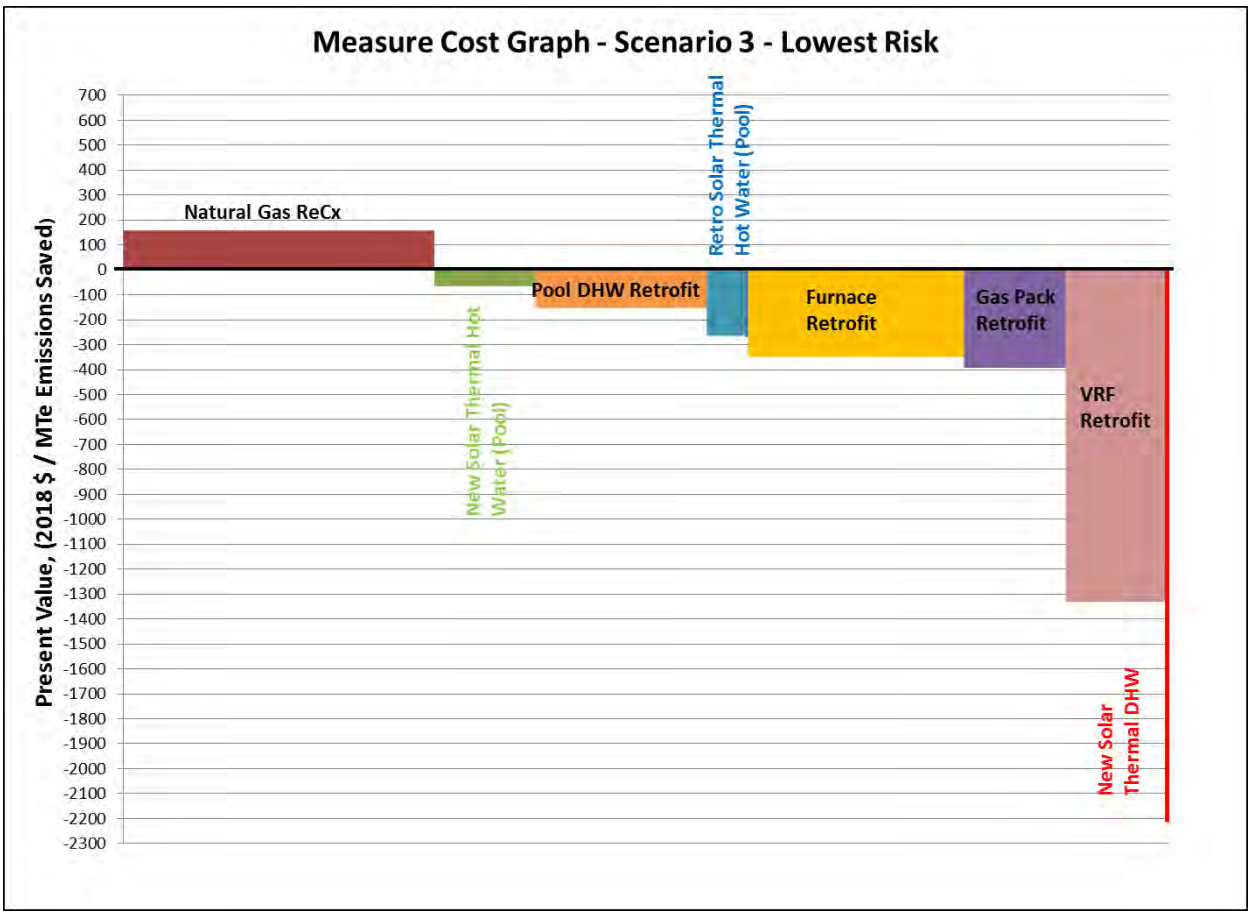

Figure 4 - Scenario 3 - Measure Cost Graph

1.3. Guide to Using This Report

This section of the report is intended to assist the reader, as interested, in locating more detailed information about the analysis underlying the results presented in the Executive Summary. The report contains analytical results intended to assist in making budgeting and measure implementation decisions about the GHG emissions reduction measures associated with building energy use. Economic analysis has been conducted in a manner consistent with analysis performed by other consultants that relate to GHG emissions from sources other than buildings.

Organization of material within the body of the report, as well as supporting material in the appendix, has been developed and organized to assist the reader in finding documentation details of interest. As a guiding principal, overview level summary information is provided toward the beginning of the report. The interested reader can drill down to more detailed information further into the various sections of the report. A description of report organization follows:

Section 1 Executive Summary

The executive summary is designed to give an overview of the analysis and results, with four tables that present GHG savings, first cost and net present value for each measure package. The following tables are provided:

- GHG savings associated with each measure package.
- Results summary table with the financial performance of each GHG reduction strategy.

Section 2 Study Buildings

This section describes the buildings included in the GHG study. The buildings include all buildings managed by the City of Eugene which use natural gas for space conditioning and/or water heating.

Section 3 Greenhouse Gas Reduction Measures

This section describes the GHG reduction measures in detail, with recommended changes, savings and costs. The section begins with brief overview measure descriptions, before getting into the detailed measure descriptions.

Section 4 Greenhouse Gas Emissions Factors

This section describes the GHG emissions factors used to estimate current greenhouse gas levels and reduction strategies.

Section 5 Appendix

The appendix contains much of the detailed background information that supports the results presented in the body of the report. Appendix sections include:

Section 5.1. Basis of Cost Estimates

Detailed cost estimates of the basis of cost documentation used for indexed costing.

Section 5.2. Basis of Cost Drawings

High level schematic design documents used to supplement and inform basis of cost documentation.

Section 5.3. Basis of GHG Savings

Basis of GHG savings tables.

Section 5.4. LCCA Spreadsheets

Life cycle cost analysis spreadsheets are provided for each measure package.

Section 5.5. Product Cut Sheets

Product cut sheets are provided for specific products used for basis of cost.

2.0 Study Buildings

The buildings selected as the primary focus of this study are buildings that use natural gas. This is due to the greenhouse gas (GHG) emissions factor associated with natural gas combusted on site compared to electricity source emissions factors for EWEB-supplied electricity. Specific emissions factors associated with fuel type are described in Section 3 of this report. The buildings that were the basis for this GHG cost study are shown in Table 6. Buildings highlighted in green and/or blue have recent background data collected via site visits that were used as part of the analysis. Non-highlighted buildings were not visited but were analyzed based on annual energy use records.

Table 6. List of Study Buildings

Building	Conditioned Area	Natural Gas (MT CO2)	Electricity (MT CO2)	Total (MT CO2)
Echo Hollow Pool	15,322	459.5	5	464.5
Sheldon Pool & Comm Ctr	32,575	290.3	5.2	295.5
Amazon Pool	8,283	266	6.4	272.4
Airport Terminal	121,317	168.1	37.4	205.5
Overpark	28,217	140.6	14.4	155
New Library	130,000	101.9	24.4	126.3
PWM - Bldgs# 1 ,14	4,011	87.5	5.4	92.9
Hult Center	135,026	57.4	15.4	72.8
Atrium Building	60,700	55.8	5.5	61.3
Fire Station 1-Downtown	28,350	47.7	3	50.7
Police/Fire Training Building	30,157	41.2	3.5	44.8
Fire Station 2-Chambers	23,332	38	2.6	40.7
Airport SRE I	8,890	27.7	0.7	28.4
Fire Station 11-Santa Clara	16,100	27.5	1.5	29
Logistics Building	23,241	26.5	1.6	28.1
Lincoln Yard	6,563	21.8	0.9	22.8
Fire Station 9-Valley River	7,825	18.6	0.7	19.3
Fire Station 6-Willakenzie	11,740	17.8	1.7	19.5
Airport Fire Station 12	4,851	17.1	2	19.1
Airport ARFF Bldg-new FS	4,851	16.7	1.6	18.2
Police Services Bldg	17,150	16.2	2.8	18.9
Shelton-McMurphey House	6,121	16	0.2	16.2
911 Center	13,320	14.7	5.2	20
Cheshire Shop and Storage	17,080	14.7	1	15.7
Police Headquarters	72,000	14.1	17.4	31.5
Airport SRE II Building	6,808	13.8	0.3	14.1
Fire Station 8-Danebo	6,021	13.5	0.6	14.1
PWM - Bldg #6	4,178	13.4	1.6	15.1
Campbell Senior Center	7,503	12.8	1.4	14.2
PWM - Bldgs #9,18	10,800	11.4	1	12.4
Parcade	37,600	10.4	10.3	20.7
PWM - Bldgs #2,3,4,5,7,8	22,000	9.6	2.2	11.8
Fire Station 10--Bailey Hill	5,266	9.4	0.7	10.1
Fire Station 15-South Hills	5,376	8	0.7	8.7
Airport Admin Building	4,178	6.8	1.7	8.5
Fire Station 7-Bethel	2,568	6.6	0.6	7.3
Petersen Park Barn	6,385	5.7	0.7	6.4
Fire Station 13-University	5,636	4.6	0.6	5.2
McNail-Riley House	1,230	4.4	0	4.5
Morse Ranch-Buildings	4,029	4.1	0.1	4.3
Washington Park Comm Center	2,816	4	0.2	4.2
Airport Air Cargo	5,000	3.8	1.7	5.5
River House	2,329	2.6	0.2	2.8
Buildings visited as part of current study. Information gathered used as part of basis of cost estimates.				
Building visited in 2015 as part of previouse study. Information gathered used as part of basis of cost estimates.				

3.0 Greenhouse Gas Reduction Measures

This section contains descriptions of GHG reduction measures identified during the analysis. Each GHG reduction measure description addresses:

- Existing conditions relevant to the measure
- Proposed changes, including equipment changes and operational changes in basis of cost building
- Source of GHG savings
- Range of GHG savings
- Implementation costs summary
- Indexed implementation costs
- Energy cost savings

GHG savings estimates are based on full implementation of all proposed changes for the measure.

Descriptions of proposed improvements within this report are diagrammatic in nature. They are intended to establish a realistic basis of cost. They do not represent detailed scope of work definitions or even recommendations. It is expected that once a scenario has been determined, a detailed design effort would be completed as part of measure implementation within that scenario. At that time, measure definition would further evolve as needed to achieve measure intent and maximize GHG savings potential of the project.

The following GHG reduction measures have been identified and analyzed:

- **Re-Commissioning of Natural Gas Equipment.** The ReCx measure consists of a natural gas-focused audit and implementation of all natural gas saving opportunities. ReCx measures focus on low cost/no cost operational changes that result in natural gas savings. Note that a natural gas-focused re-commissioning effort will also deliver electrical energy savings.
- **Boiler Replacement for Swimming Pool Heating Water Systems.** The swimming pool boiler replacement measure involves the replacement of existing steam and HW boilers with air-to-water heat pumps.
- **Solar Thermal Heating Water System Addition for Swimming Pools.** Solar thermal addition involves the addition of unglazed solar panels for heating pools currently not served by solar thermal system.
- **Solar Thermal Heating Water System Retrofit for Swimming Pools.** Solar thermal retrofit involves the retrofit of solar thermal systems that are currently not operating correctly due to piping issues or inadequate solar collector area.
- **Boiler Replacement for Building Heating Water Systems.** The HVAC boiler replacement measure involves the replacement of existing HW boilers with air-to-water heat pumps.
- **Packaged Gas-Pack Roof Top Unit Replacement.** This measure proposes replacement of the existing packaged gas-pack RTUs with heat pump RTUs.
- **Natural Gas Furnace Replacement.** This measure proposes replacement of the existing gas furnaces with split-system heat pumps.
- **Variable Refrigerant Flow (VRF) System Retrofit.** This measure proposes the retrofit of gas heated buildings with a multi-zone heat pump VRF system along with dedicated outside air system (DOAS).
- **Swimming Pool Heat Pump Domestic Hot Water (DHW) System Retrofit.** The swimming pool DHW replacement measure involves the addition of air-to-water heat pumps to existing pool DHW systems.
- **High Use Heat Pump Domestic Hot Water System Retrofit.** The DHW replacement measure involves the addition of air-to-water heat pumps to existing high usage DHW systems.
- **Low Use Heat Pump Domestic Hot Water System Retrofit.** The DHW replacement measure involves the replacement of small natural gas DHW heaters with CO2 heat pump water heaters.

- **Solar Thermal Domestic Hot Water System Installation.** Solar thermal installation involves the addition of glazed solar panels for DHW heating in high use buildings currently not served by solar thermal system.
- **Solar Thermal Domestic Hot Water System Retrofit.** Solar thermal retrofit involves the retrofit of existing one-pass solar thermal systems to a higher use design.

3.1. Re-Commissioning (ReCx) of Natural Gas Equipment

3.1.1. Existing Conditions

Based on the walkthroughs of 10 of the larger GHG producing buildings, there are significant opportunities for ReCx in City of Eugene owned and operated buildings. The ReCx opportunities noted during site visits include:

- HVAC equipment scheduling
- Minimum airflow rate adjustments in VAV systems
- Zone-level temperature and control setpoint optimization
- System-level temperature and pressure control optimization in HVAC units and boiler systems
- Cleaning of outdoor condenser units
- Improved pool energy performance via modified operations and more rigorous use of pool covers

3.1.2. Proposed Changes

The ReCx measure category is proposed to consist of a natural gas-focused ReCx audit and implementation of all items resulting from audits on the top 20 natural gas-using buildings. The audit should be performed by a capable energy analysis firm with the ability to identify low cost/no cost strategies aimed at reducing natural gas usage. It is also recommended that the firm providing the ReCx study be a qualified ATAC with the ETO in order to receive incentives for ReCx. (Note that ETO incentives are likely to be available for this measure; however, they have not been accounted for in the cost analysis performance for this study.) In general, the following elements of a natural gas-targeted energy audit involve:

- Detailed operations assessment of all natural gas-using equipment
- Trending or datalogging to record the function of the targeted natural gas equipment
- Analysis of trending/datalogging to determine potential low cost/no cost measures
- Creation of a technical analysis study (TAS) compliant with ETO standards. Study that includes estimated cost, cost savings, potential incentives and implementation plan
- ATAC providing the TAS would then work with contractors and City of Eugene staff to implement all measures outlined in TAS
- Measurement and verification to verify proper implementation of ReCx measures

3.1.3. Greenhouse Gas Emissions Summary

GHG savings associated with ReCx varies based on current operating use of the building. Based on the site visits performed, the majority of the buildings visited are estimated to save 15% of the natural gas GHG emissions with a comprehensive ReCx effort. Energy cost savings reduction (for both gas and electricity) is also assumed at the same level as the GHG emissions reduction. This value was applied to the top 20 natural gas-using buildings. Table 7 is a list of the buildings and a summary of building-by-building GHG savings assumptions that have been included in the Re-Commissioning of Natural Gas Equipment measure.

Table 7. Summary of Building Savings Included in the ReCx Measure Category

Building Name	Conditioned Area	Measure Savings	MT CO2 Savings
Echo Hollow Pool	15,322	15%	68.9
Sheldon Pool & Comm Ctr	32,575	15%	43.5
Amazon Pool	8,283	15%	39.9
Airport Terminal	8,283	15%	25.2
Overpark	28,217	50%	70.3
Downtown Library	130,000	5%	5.1
PWM - Bldgs# 1 ,14	4,011	15%	13.1
Hult Center	135,026	15%	8.6
Atrium Building	60,700	15%	8.4
Fire Station 1-Downtown	28,350	15%	7.2
Police/Fire Training Building	30,157	15%	6.2
Fire Station 2-Chambers	23,332	15%	5.7
Airport SRE I	8,890	15%	4.2
Fire Station 11-Santa Clara	16,100	5%	1.4
Logistics Building	23,241	15%	4.0
Lincoln Yard	6,563	15%	3.3
Fire Station 9-Valley River	7,825	15%	2.8
Fire Station 6-Willakenzie	11,740	15%	2.7
Airport Fire Station 12	4,851	15%	2.6
Airport ARFF Bldg-new FS	4,851	15%	2.5
Police Services Bldg	17,150	15%	2.4
Total	**605,467**		**328**

3.1.4. Cost Estimate Summary

Measure implementation cost was based on ReCx efforts currently underway for City of Eugene buildings. The implementation cost for ReCx measures has an indexed cost of $1.00/sf. This cost is associated with natural gas GHG savings and is not expected to cover the entire cost of a full ReCx effort. Based on feedback from City staff, it is expected that part of the total cost of ReCx work will be funded from other current City budgets.

Table 8 is a summary of the implementation cost for each of the buildings in the Re-Commissioning of Natural Gas Equipment measure category.

Table 8. Summary of Building Costs Included in the ReCx Measure Category

Building Name	Conditioned Area	Implementation Cost
Echo Hollow Pool	15,322	$15,322
Sheldon Pool & Comm Ctr	32,575	$32,575
Amazon Pool	8,283	$8,283
Airport Terminal	8,283	$15,322
Overpark	28,217	$28,217
Downtown Library	130,000	$130,000
PWM - Bldgs# 1 ,14	4,011	$4,011
Hult Center	135,026	$135,026
Atrium Building	60,700	$60,700
Fire Station 1-Downtown	28,350	$28,350
Police/Fire Training Building	30,157	$30,157
Fire Station 2-Chambers	23,332	$23,332
Airport SRE I	8,890	$8,890
Fire Station 11-Santa Clara	16,100	$16,100
Logistics Building	23,241	$23,241
Lincoln Yard	6,563	$6,563
Fire Station 9-Valley River	7,825	$7,825
Fire Station 6-Willakenzie	11,740	$11,740
Airport Fire Station 12	4,851	$4,851
Airport ARFF Bldg-new FS	4,851	$4,851
Police Services Bldg	17,150	$17,150
Total	**605,467**	**$612,506**

3.2. Boiler Replacement for Swimming Pool Heating Water Systems

3.2.1. Existing Conditions

3.2.1.1. Echo Hollow Pool

Echo Hollow Pools is currently heated by a 7,000 MBH steam boiler serving (2) two heat exchangers (HXs) that maintain pool temperature setpoints. Separate HXs serve the indoor and outdoor sections of the pool. All steam piping and heat exchangers are currently located in the mechanical room. Pool heating water (HW) piping starts at the heat exchangers and is piped to the pool via underground piping.

3.2.1.2. Sheldon Pool

Sheldon Pool is heated by a 6,000 MBH steam boiler serving two (2) heat exchangers (HXs). Separate HXs serve lap and diving pools. All steam piping and heat exchangers are currently located in the mechanical room. Pool HW piping starts at the heat exchangers and is piped to the pool via underground piping.

3.2.1.3. Amazon Pool

Currently, Amazon Pool is heated by (1) 3,500 MBH HW boiler and (1) 3,200 MBH HW boiler serving four (4) HXs. The HXs are dedicated to the 50 meter pool, beginner pool, multi-use pool and hot tub. All HW piping upstream of the HXs is currently located in the mechanical room. Pool HW piping is fed from the heat exchangers and piped to the pool via underground piping. The existing HXs are sized based on a 40 degree temperature drop across the hot side of the HX.

3.2.2. Proposed Changes

3.2.2.1. Echo Hollow Pool

The boiler replacement measure consists of the addition of a new Airstack air-to-water heat pump system to operate as the primary source of HW generation for pool heating. The existing natural gas boiler plant would be decommissioned and removed. Three (3) 1,000 MBH natural gas condensing boilers would be installed to act as backup during low outdoor air temperature conditions. In general, the following scope of work elements are involved:

- Natural gas boiler demolition: Demolition of (1) 7,000 MBH natural gas steam boiler.
- Steam Distribution: Demolition of all steam piping, valves, HX, steam coils and appurtenances.
- Electrical Service: Install new 460V 3-phase step-up transformer to accommodate the increased electrical service needed for air-to-water heat pumps.
- Natatorium Heat Pump: Install new 840 MBH Airstack air-to-water heat pump on roof. Electrical service to be run from new electrical room to the unit.
- Pool Heat Pump: Install new 2,650 MBH Airstack air-to-water heat pump on North side of building. Electrical service to be run from new electrical room to the unit.
- Back-up Boiler: Install (2) new 1,000 MBH KN-10 condensing boiler for pool HW loop and (1) 1,000 MBH KN-10 for natatorium HW loop.
- Heat Exchangers: Install (2) water-to-water HX between the closed loop air-to-water heat pumps and the swimming pool HW systems. The new HX sizes are (1) 2300 MBH and (1) 350 MBH. New HX are sized for a 20 degree temperature drop.
- Hot Water Piping: New HW piping on the boiler side of the HX to be piped between the air-to-water heat pumps and the new HX.
- Pumps: Install new pumping on the hot and cold water side of the new HX.
- Heating Coil: Install new low temperature HW coil in SF-1 to replace existing steam coil.
- HW Distribution: New HW piping connecting the air-to-water heat pumps to the new HX. HW piping distribution to include valves, fittings, appurtenances and insulation.
- Electrical: New electrical service described in recommendation below.
- New controls: Comprehensive DDC controls and graphics to be installed on existing building controls.
- Structural: Roofing structure upgrades to accommodate air-to-water heat pump on roof.

<u>Mechanical Room</u>

The major demolition work is in the mechanical room, involving removal of the existing steam boiler, HXs, steam piping and appurtenances. Installation work involves a new air-to-water heat pumping systems for pool water heating adjacent to the building mechanical room. New HW piping and water-to-water HX would need to be installed and all connections to the existing pool HW piping re-established.

<u>Electrical</u>

Existing Conditions: Echo Hollow Pool is served with 208 volts / 3 phase service with an 800 amp main service switchboard. Peak utility demand for Echo Hollow Pool over a 12 month period is 63 kW (175 Amps at 208 volts.) Severe corrosion of existing electrical equipment indicates existing electrical equipment should be replaced.

Proposed Additional Load: Two Airstack air-to-water heat pump boilers are proposed. Boiler electrical characteristics are 553 minimum circuit amps at 480 volts, 3 phase and 50 minimum circuit amps at 480 volts. There is not sufficient capacity at the main distribution panel to serve the new heat pump load.

Basis of Cost Assumption: Re-use the existing 800 amp service lateral and CT enclosure and use to feed a new 480 volt 3 phase 800 amp switchboard. Install a new 480:208 volt step-down transformer and feed a new 208 volt distribution panel. Reconnect existing 208 volt feeders. With the service upgrade, EWEB would need to replace the

existing service transformer. New heat pumps would be served from the new 480 volt service panel. Feeder lengths are approximately 75 feet.

If this work is undertaken, it is strongly recommended that the Chlorine Room currently located next to the main electrical room be relocated as this has likely contributed to degradation of the electrical distribution equipment. The existing chlorine room could be used to house the new 480 volt distribution panel and 480: 208 volt step down transformer. Note that relocation of the Chlorine Room has not been included in the cost estimate for this study.

Roof

Rooftop to be used for the addition of a new solar thermal system described in swimming pool solar thermal measure.

3.2.2.2. Sheldon Pool

The boiler replacement measure consists of the addition of a new Airstack air-to-water heat pump system to operate as the primary form of HW generation. The existing natural gas boiler plant would be decommissioned and removed. Two (2) 1,000 MBH natural gas condensing boilers are assumed to be installed to act as backup during low outdoor air temperature conditions. In general, the following elements are involved:

- Natural gas boiler demolition: Demolition of (1) 6,000 MBH natural gas steam boiler.
- Steam Distribution: Demolition of all steam piping, valves, HX, steam coils and appurtenances.
- Electrical Service: Install new 460V 3-phase step-up transformer to accommodate the increased electrical service needed for air-to-water heat pumps.
- Natatorium Heat Pump: Install new 840 MBH Airstack air-to-water heat pump on roof. Electrical service to be run from new electrical room to the unit. Roofing structure to be evaluated and updated to accommodate additional weight.
- Pool Heat Pump: Install new 2,650 MBH Airstack air-to-water heat pump on North side of building. Electrical service to be run from new electrical room to the unit.
- Back-up Boilers: Install (1) new 1,000 MBH KN-10 condensing boiler for pool HW loop and (1) 1,000 MBH KN-10 for natatorium HW loop.
- Heat Exchangers: Install (2) water-to-water HX between the closed loop air-to-water heat pumps and the swimming pool HW systems. The new HX sizes are (1) 500 MBH and (1) 350 MBH. New HX are sized for a 20 degree temperature drop.
- Community Center to be converted to VRF system per analysis done by Systems West Engineers and described in VRF retrofit section of basis of cost.
- Hot Water Piping: New HW piping on the boiler side of the HX to be piped between the air-to-water heat pumps and the new HX.
- Pumps: Install new pumping on the hot and cold water side of the new HX.
- Heating Coil: Install new low temperature HW coil in MZ-1 to replace existing steam coil.
- Electrical: New electrical service described in recommendation below.
- New controls: Comprehensive DDC controls and graphics to be installed on existing building controls.
- Structural: Roofing structure upgrades to accommodate air-to-water heat pump on roof.

Mechanical Room

The major demolition work is in the mechanical room, and involves removal of the existing steam boiler, HX, steam piping and appurtenances. Installation work involves new air-to-water heat pumping systems in two locations. The swimming pool heat pump is assumed to be installed adjacent to the building in a fenced area on the north side and the natatorium heat pump is assumed to be installed on the roof. New HW piping and water-to-water HX would need to be installed and all connections to the existing pool HW piping reestablished.

Electrical

Existing Conditions: Sheldon Pool is served at 208 volt / 3 phase service by an 800 amp main service switchboard. Peak utility demand for Sheldon Pool over a 12 month period is 76 kW (211 Amps at 208 volts.)

Proposed Additional Load: Three Airstack air-to-water heat pumps are proposed. Electrical characteristics are 197 minimum circuit amps at 480 volts, 3 phase, 277 minimum circuit amps at 480 volt, 3 phase and 50 minimum circuit amps at 480 volts, respectively. There is not sufficient capacity at the main distribution panel to serve the new heat pump load.

Basis of Cost Assumption: Reuse the existing 800 amp service lateral and meter current transformer (CT) enclosure and use to feed a new 480 volt 3 phase 800 amp switchboard. Install a new 480: 208 volt step-down transformer and re-feed the existing main distribution panel. With the proposed service upgrade, EWEB would need to replace the existing service transformer. New heat pumps would be served from the new 480 volt service panel. Feeder lengths are approximately 75 feet.

3.2.2.3. Amazon Pool

The boiler replacement measure consists of the addition of a new Airstack air-to-water heat pump system to operate as the primary source of HW generation. The existing natural gas boiler plant would be decommissioned and removed. Two (2) 1,000 MBH natural gas condensing boilers are assumed to be installed to act as backup during low outdoor air temperature conditions. In general, the following elements are involved:

- Natural gas boiler demolition: Demolition of (1) 3,500 MBH and (1) 3200 MBH natural gas HW boilers.
- Pool Heat Pump: Install new 5,100 MBH Airstack air-to-water heat pump on north side of building. Electrical service to be run from electrical room to the unit.
- Back-up Boilers: Install (2) new 1,000 MBH KN-10 condensing boiler for pool HW loop backup.
- Heat Exchangers: Replace (4) water-to-water HX between the closed loop air-to-water heat pumps and the swimming pool HW systems. The new HX sizes are (1) 440 MBH, (2) 1500 MBH and (1) 825 MBH. New HX are sized for a 20 degree temperature drop.
- Heat Water Piping: New HW piping to connect new air-to-water heat pump to existing HW loop.
- New controls: Comprehensive DDC controls and graphics to be installed on existing building control system.
- Electrical: New service as described below.

Mechanical Room

The major demolition work is in the mechanical room. The existing HW boiler and HXs are to be removed. Installation work involves a new air-to-water heat pumping system adjacent to the building on the north side. New HW piping and water-to-water HX would need to be installed and all connections to the existing HW piping reestablished.

Electrical

Existing Conditions: Amazon Pool is served with 480 volts / 3 phase service via a 600 amp main service switchboard. Peak utility demand for Amazon Pool over a 12 month period is 132 kW (159 Amps at 480 volts.)

Proposed Additional Load: Two Airstack air to water heat pump boilers are proposed. Boiler electrical characteristics are 553 minimum circuit amps at 480 volts, 3 phase and 50 minimum circuit amps at 480 volts. There is not sufficient capacity at the main distribution panel to serve the new heat pump load.

Basis of Cost Assumption: Install a third service conduit and upgrade electrical service to the building to 1000 amps. Replace the existing main distribution panel in its current location with a new 1000 amp main breaker switchboard. Reconnect existing feeders and provide new 600/3 and 50/3 circuit breakers for the new heat pumps. Feeder lengths are approximately 30 feet. With the service upgrade, EWEB may also need to upgrade the existing pad-mount transformer.

3.2.3. Greenhouse Gas Emissions Summary

GHG savings associated with the boiler replacement vary based on current operating use of the pools and the percentage of total natural gas use the pool and natatorium heating consumes. Table 9 is a list of the buildings and estimated GHG savings included in the Boiler Replacement for Pool Heating Water Systems measure.

Table 9 – Summary of Pool Savings

Building Name	Conditioned Area	Measure Savings	MT CO2 Savings
Echo Hollow Pool	15,322	38%	174.6
Sheldon Pool & Comm Ctr	32,575	35%	101.6
Amazon Pool	8,283	51%	135.7
Total	**56,180**		**412**

3.2.4. Cost Estimate Summary

Measure implementation cost was based on a preliminary basis of design and cost estimate for each of the pool projects. This cost estimate represents a reasonable cost associated with the upgrade of the HW systems. The contingency added to each of the cost estimates represents the high level design and is not intended to represent the construction market fluctuation. Detailed cost estimates and basis of design drawings are located in the appendix of the report. Table 10 is a summary of the implementation cost for each of the buildings in the Boiler Replacement for Pool Heating Water Systems measure category.

Table 10 – Summary of Pool Measure Costs

Building Name	Conditioned Area	Implementation Cost
Echo Hollow Pool	15,322	$1,581,479
Sheldon Pool & Comm Ctr	32,575	$1,206,377
Amazon Pool	8,283	$1,522,600
Total	**56,180**	**$4,310,456**

3.3. Solar Thermal Heating Water System Addition for Swimming Pools

3.3.1. Existing Conditions

Currently, Echo Pool is the only pool facility which does not have a solar thermal system serving any of its pools. The Sheldon lap pool is currently served by an unglazed solar collector array located on the roof. The Sheldon dive pool is not served by a solar system. Both buildings have sufficient area on the roof to accommodate appropriately sized solar thermal systems.

3.3.2. Proposed Changes

The Solar Thermal Heating System Addition measure consists of the addition of new unglazed solar collectors equal to the area of the pool being served. The solar system basis of cost is assumed to be similar to the design of the existing solar system installed at Amazon pool. Unglazed collectors are used for this measure rather than glazed or evacuated tube due to the lower cost and ample roof area. In general, the following elements are involved:

- Installation of 4’x10’ unglazed solar panels on the roof of the building. Installation to include framing structure and strapping to secure the solar thermal system to the roof.
- Solar Thermal HW Piping: New HW piping to the existing HW loop. HW piping is to include valves, fittings, appurtenances and insulation.
- New controls: Comprehensive DDC controls and graphics to be installed on existing building control system.

Roof

Structural upgrades may be required to support the additional solar panels depending on findings by a structural engineer. Note that this roof structure upgrades have not been included in the basis of cost estimates.

3.3.3. Greenhouse Gas Emissions Summary

GHG savings associated with solar thermal vary based on the size of the pool and the associated collector area installed. Table 11 is a list of the buildings and GHG savings included in the Solar Thermal Heating Water System Addition for Swimming Pools measure.

Table 11 - Summary of Measure Savings

Building Name	Conditioned Area	Measure Savings	MT CO2 Savings
Echo Hollow Pool	15,322	17.2%	79.0
Sheldon Pool & Comm Ctr	32,575	10.3%	29.9
Total	**47,897**		**109**

3.3.4. Cost Estimate Summary

Measure implementation cost was based on a preliminary basis of design and cost estimate for each of the pool projects. This cost estimate represents a reasonable cost associated with the addition of a solar thermal system. The contingency added to each of the cost estimates represents the high level design and is not intended to represent the construction market fluctuation. Detailed cost estimates and basis of design drawings are located in the appendix of the report. Table 12 is a summary of the implementation cost for each of the buildings in the Solar Thermal Heating Water System Addition for Swimming Pools measure category.

Table 12 - Summary of Measure Costs

Building Name	Conditioned Area	Implementation Cost
Echo Hollow Pool	15,322	$301,386
Sheldon Pool & Comm Ctr	32,575	$104,776
Total	**47,897**	**$406,162**

3.4. Solar Thermal Heating Water System Retrofit for Swimming Pools

3.4.1. Existing Conditions

This measure addresses existing solar systems at Amazon and Sheldon Pools.

Currently, Amazon Pool is served by an unglazed solar thermal system that is undersized for the heating loads of the 50 meter pool. Due to a lack of roof area over the locker room and lobby building (and the desire to avoid ground-mounted systems), additional solar thermal collector area is not feasible.

The Sheldon lap pool retrofit involves re-piping the solar collector system to reverse the flow. Currently, the flow is running in the opposite direction of the desired flow causing short circuiting and not providing heating to the pool. It is also noted that the outdoor sensor on the solar thermal system has been cut and capped.

3.4.2. Proposed Changes

Amazon: The solar thermal heating system at Amazon pool consists of the replacement of the existing unglazed collectors with new flat plate glazed solar collectors equal to the existing collector area. In general, the following elements are involved:

- Installation of 4'x10' flat plate glazed solar panels on the roof of the building. Installation to include upgrades to the existing framing structure to support the additional weight.

- Solar Thermal HW Piping: New HW piping to tie the new solar thermal system into existing. HW piping to include valves, fittings, appurtenances and insulation.
- New controls: Comprehensive DDC controls and graphics to be installed on existing building control system. Controls must be programmed to allow drainback for freeze protection.

Sheldon: The retrofit at Sheldon will require changing the piping layout of the 4" PVC piping in the mechanical room to reverse the flow through the collectors. The outdoor sensor that has been cut needs to be repaired and/or replaced.

3.4.3. Greenhouse Gas Emissions Summary

GHG savings associated with solar thermal vary based on the size of the pool and the associated collector area and type installed. Table 13 is a list of the buildings and estimated GHG savings for this measure.

Table 13 - Summary of Measure Savings

Building Name	Conditioned Area	Measure Savings	MT CO2 Savings
Sheldon Pool & Comm Ctr	32,575	10.3%	30.0
Amazon Pool	8,283	4.1%	11.0
Total	**40,858**		**41**

3.4.4. Cost Estimate Summary

Measure implementation cost was based on a preliminary basis of design and cost estimate for each of the pool projects. This cost estimate represents a reasonable cost associated with the retrofit of the solar thermal systems. The contingency added to each of the cost estimates represents the high level design and is not intended to represent the construction market fluctuation. Detailed cost estimates and basis of design drawings are located in the appendix of the report. Table 14 is a summary of the implementation cost for each of the buildings in the Solar Thermal Heating Water System Retrofit for Swimming Pools measure category.

Table 14 – Summary of Measure Cost

Building Name	Conditioned Area	Implementation Cost
Sheldon Pool & Comm Ctr	32,575	$3,276
Amazon Pool	8,283	$320,425
Total	**40,858**	**$323,701**

3.5. Boiler Replacement for Building Heating Water Systems

3.5.1. Existing Conditions

The basis of cost for this measure is based on the Eugene Airport boiler system. Currently, the Eugene Airport is served by two (2) Benchmark 2.0 (2,000 MBH) HW boilers running in a lead-lag configuration. The HW system serves distributed fan coil units and central station air handling units that serve different areas of the terminal. Based on site observation and drawing review, the current HW coils are sized for a 20 degree temperature drop across the coil.

3.5.2. Proposed Changes

The boiler replacement measure consists of the addition of a new Airstack air-to-water heat pump system to run as the primary source of HW generation. The existing natural gas boiler plant would remain and act as the backup heating source. In general, the following elements are involved:

- Air-to-Water Heat Pump: Install new 1,560 MBH Airstack air-to-water heat pump next to existing cooling towers adjacent to the mechanical room. Electrical service to be run from electrical room to the unit.

- HW Distribution: New HW piping connecting the air-to-water heat pumps to the existing HW loop. HW piping to include valves, fittings, appurtenances and insulation.
- Electrical: New internal electrical distribution based on recommendation below.
- New controls: Comprehensive DDC controls and graphics to be installed on existing building control system.

Mechanical Room

The major reconfiguration work is in the mechanical room. The new air-to-water heat pump will tie into the existing boiler loop to act as primary heating supply. New air-to-water heat pumping system is to be installed adjacent to the mechanical room next to the existing cooling towers.

Electrical

Existing Conditions: The Airport Mechanical Building is served with 480 volt / 3 phase service by a 2500 amp main service switchboard. Existing drawings indicate that there is space for additional circuit breakers to be installed. Peak utility demand for the Airport over a 12 month period is 602 kW (725 Amps at 480 volts.)

Proposed Additional Load: Two Airstack air-to-water heat pump boilers are proposed. Boiler electrical characteristics are 419 minimum circuit amps at 480 volts, 3 phase and 50 minimum circuit amps at 480 volts. There is sufficient capacity at the main distribution panel to serve the new heat pump load.

Basis of Cost Assumption: Install new 600/3 circuit breaker in the 480 volt main distribution switchboard and use to feed a new heat pump distribution panel located in the existing boiler room. Feeder routing in the building (+/- 50 feet) would be exposed in the existing mechanical building.

3.5.3. Greenhouse Gas Emissions Summary

GHG savings associated with the Boiler Replacement vary based on current operating use of the building and the percentage of total natural gas use the HVAC heating represents. Table 15 is a list of the buildings to which this measure applies, and estimated GHG savings for each building.

Table 15 – Summary of Measure Savings

Building Name	Conditioned Area	Measure Savings	MT CO2 Savings
Airport Terminal	2,568	60%	100.9
Downtown Library	130,000	75%	76.4
Hult Center	135,026	65%	37.3
Atrium Building	60,700	65%	36.3
Fire Station 1-Downtown	28,350	50%	23.8
Police/Fire Training Building	30,157	50%	20.6
Total	**386,801**		**295**

3.5.4. Cost Estimate Summary

Measure implementation cost was based on a preliminary basis of design and cost estimate for the Airport system that was then indexed on a sf basis and applied to each of the other applicable buildings. Detailed cost estimate and basis of design drawings are located in the appendix of the report for the Airport system. Table 16 is a summary of the implementation cost for each of the buildings in the Boiler Replacement for Building Heating Water Systems measure category.

Table 16 – Summary of Measure Costs

Building Name	Conditioned Area	Implementation Cost
Airport Terminal	2,568	$1,380,587
Downtown Library	130,000	$1,479,400
Hult Center	135,026	$1,536,596
Atrium Building	60,700	$690,766
Fire Station 1-Downtown	28,350	$322,623
Police/Fire Training Building	30,157	$343,187
Total	**386,801**	**$5,753,159**

3.6. Packaged Gas-Pack Roof Top Unit Replacement

3.6.1. Existing Conditions

The basis of cost estimate for this measure is based on the Eugene Police Headquarters replacement. Currently, the Police Headquarters is served by one (1) 7.5-ton and two (2) 50-ton packaged roof top units (RTUs) with gas furnaces (gas packs.) These units are original to the renovation construction and are in good working condition.

3.6.2. Proposed Changes

The gas-pack RTU replacement measure consists of the replacement of all gas-pack units with heat pump RTUs with backup electric resistance strip heat. All RTUs are to be replaced as a one-for-one change out with an identical unit, where applicable. For large gas-pack units which would be cost prohibitive to replace with a single heat pump unit, multiple heat pumps units would replace a large single unit. In general, the following elements are involved:

- Heat Pumps: Replace (1) 7.5 Ton and (2) 50 Ton gas-pack RTUs with (1) 7.5 Ton and (4) 25 Ton heat pump RTUs. Unit airflows and outside air rates to match the existing units being replaced unless engineer recommendation differs from existing conditions.
- Provide new roof penetrations and RTU mounting curb, where applicable, to accommodate the additional heat pump units.
- Install new ductwork, where applicable, to accommodate the additional heat pump units.
- Electrical: New internal electrical distribution based on recommendation below.
- New controls: Comprehensive DDC controls and graphics to be installed on existing building control system.

<u>Roof</u>

The major work would be to the units located on the roof. Changes in the ductwork and roof structure would be required to accommodate the new heat pump units.

<u>Electrical</u>

Existing Conditions: The Eugene Police Headquarters is served at 480 volt / 3 phase by a 2500 amp switchboard. The switchboards use circuit breakers and existing drawings indicate that there is space for additional circuit breakers that can be utilized. Peak utility demand for the Police Headquarters over a 12 month period is 304 kW (366 Amps at 480 volts.)

Proposed Additional Load: Five (5) packaged heat pumps RTUs with electric resistance supplemental heat. The total electrical characteristics are 130 minimum circuit amps at 480 volts, 3 phase. There is sufficient capacity at the main distribution panel to serve the new heat pump load.

Basis of Cost Assumption: Use existing breaker to serve the new heat pump units with new internal electrical service.

3.6.3. Greenhouse Gas Emissions Summary

GHG savings associated with RTU replacement vary based on current operating use of the building and the percentage of total natural gas use the HVAC system consumes. Table 17 is a list of the buildings and GHG savings included in the Packaged Gas-Pack Roof Top Unit Retrofit measure.

Table 17 – Summary of Measure Savings

Building Name	Conditioned Area	Measure Savings	MT CO2 Savings
Fire Station 2-Chambers	23,332	50%	19.0
Airport SRE I	8,890	60%	16.6
Logistics Building	23,241	60%	15.9
Lincoln Yard	6,563	60%	13.1
911 Center	13,320	95%	14.0
Police Headquarters	72,000	95%	13.4
Campbell Community Center	7,503	95%	12.1
Total	**154,849**		**104**

3.6.4. Cost Estimate Summary

Measure implementation cost was based on a preliminary basis of design and cost estimate for the Police Headquarters Building. This cost estimate was indexed by sf of heated area and applied to all of the buildings listed above. Detailed cost estimates and basis of design drawings are located in the appendix of the report. Table 18 is a summary of the implementation cost for each of the buildings in the Packaged Gas-Pack Roof Top Unit Retrofit measure category.

Table 18 – Summary of Measure Cost

Building Name	Conditioned Area	Implementation Cost
Fire Station 2-Chambers	23,332	$113,860
Airport SRE I	8,890	$43,383
Logistics Building	23,241	$113,416
Lincoln Yard	6,563	$32,027
911 Center	13,320	$65,002
Police Headquarters	72,000	$351,360
Campbell Community Center	7,503	$36,615
Total	**154,849**	**$755,663**

3.7. Natural Gas Furnace Replacement

3.7.1. Existing Conditions

The basis of cost estimate for this measure is based on the Fire Station 11 replacement. Currently, Fire Station 11 is served by seven (7) furnaces with split system direct expansion (DX) cooling coils with associated outdoor units. The furnaces are located in two (2) mechanical rooms located on the 2nd floor of the building. All split system outdoor units are located on a flat roof in the center of the building. The furnaces are in good working condition.

3.7.2. Proposed Changes

The gas furnace replacement measure consists of the replacement of all gas furnaces (with DX cooling) with heat pump split system units with backup electric resistance strip heat. All furnaces to be replaced as a one-for-one change-out with an identically sized heat pump. In general, the following elements are involved:

- Demolition: Demo all existing gas furnaces.

- Heat Pumps: Replace (1) 7.5-ton and (5) 5-ton and (1) 3-ton gas furnaces with a split system replacement. Unit airflows and outside air rates to match the existing units being replaced unless engineer recommendation differs from existing conditions.
- Electrical: New internal electrical distribution based on recommendation below.
- New controls: Comprehensive DDC controls and graphics to be installed on existing building control system.

Mechanical Rooms

The major work would be to the units located in the existing mechanical rooms. Minimal changes in the ductwork are expected to accommodate the new heat pump units.

Electrical

Existing Conditions: Fire Station 11 is served at 208 volts / 3 phase by an 800 amp distribution switchboard. Peak utility demand for Fire Station 11 over a 12 month period is 34 kW (95 Amps at 208 volts.)

Proposed Additional Load: Seven (7) split system heat pumps with electric strip heat. The total electrical characteristics are 55 minimum circuit amps at 208 volts. There is sufficient capacity at the main distribution panel to serve the new heat pump load.

3.7.3. Greenhouse Gas Emissions Summary

GHG savings associated with furnace replacement vary based on current operating use of the building and the percentage of total natural gas use the HVAC system consumes. Table 19 is a list of the buildings and GHG savings included in the Natural Gas Furnace Retrofit measure.

Table 19 – Summary of Measure Savings

Building Name	Conditioned Area	Measure Savings	MT CO2 Savings
PWM - Bldgs# 1 ,14	4,011	65%	56.8
Fire Station 11-Santa Clara	16,100	55%	15.1
Fire Station 9-Valley River	7,825	50%	9.3
Fire Station 6-Willakenzie	11,740	65%	11.5
Airport Fire Station 12	4,851	80%	13.7
Airport ARFF Bldg-new FS	4,851	80%	13.3
SMJ House	6,121	95%	15.2
Cheshire Shop and Storage	17,080	75%	11.0
Airport SRE II Building	6,808	75%	10.4
Fire Station 8-Danebo	6,021	65%	8.8
PWM - Bldg #6	4,178	75%	10.1
PWM - Bldgs #9,18	10,800	75%	8.5
PWM - Bldgs #2,3,4,5,7,8	22,000	75%	7.2
Fire Station 10--Bailey Hill	5,266	55%	5.1
Fire Station 15-South Hills	5,376	65%	5.2
Airport Admin Building	4,178	95%	6.5
Fire Station 7-Bethel	2,568	65%	4.3
Petersen Barn Community Center	6,385	95%	5.4
Fire Station 13-University	5,436	65%	3.0
McNail-Riley House	1,230	95%	4.2
Morse Ranch-Buildings	4,029	95%	3.9
Washington Park Comm Center	2,816	95%	3.8
Airport Air Cargo	5,000	75%	2.9
River House Community Center	2,329	95%	2.5
Total	**166,999**		**238**

3.7.4. Cost Estimate Summary

Measure implementation cost was based on a preliminary basis of design and cost estimate for the Fire Station 11 replacement. This cost estimate was indexed based on heated sf, and applied to all other buildings listed above. Detailed cost estimates and basis of design drawings are located in the appendix of the report. Table 20 is a summary of the implementation cost for each of the buildings in the Natural Gas Furnace Retrofit measure category.

Table 20 – Summary of Measure Costs

Building Name	Conditioned Area	Implementation Cost
PWM - Bldgs# 1 ,14	4,011	$37,543
Fire Station 11-Santa Clara	16,100	$150,696
Fire Station 9-Valley River	7,825	$73,242
Fire Station 6-Willakenzie	11,740	$109,886
Airport Fire Station 12	4,851	$45,405
Airport ARFF Bldg-new FS	4,851	$45,405
SMJ House	6,121	$57,293
Cheshire Shop and Storage	17,080	$159,869
Airport SRE II Building	6,808	$63,723
Fire Station 8-Danebo	6,021	$56,357
PWM - Bldg #6	4,178	$39,106
PWM - Bldgs #9,18	10,800	$101,088
PWM - Bldgs #2,3,4,5,7,8	22,000	$205,920
Fire Station 10--Bailey Hill	5,266	$49,290
Fire Station 15-South Hills	5,376	$50,319
Airport Admin Building	4,178	$39,106
Fire Station 7-Bethel	2,568	$24,036
Petersen Barn Community Cente	6,385	$59,764
Fire Station 13-University	5,436	$50,881
McNail-Riley House	1,230	$11,513
Morse Ranch-Buildings	4,029	$37,711
Washington Park Comm Center	2,816	$26,358
Airport Air Cargo	5,000	$46,800
River House Community Center	2,329	$21,799
Total	**166,999**	**$1,563,111**

3.8. Variable Refrigerant Flow System Retrofit

3.8.1. Existing Conditions

The basis of cost for this measure is based on the Sheldon Community Center retrofit. Currently, Sheldon Community Center is served by two air handling units – a multi-zone unit (MZU) and a heating and ventilated unit (HVU). Each is equipped with HW coils. The HW coils are served off of a HX in the main mechanical room of the pool. The HX is served by a 6,000 MBH steam boiler which also serves the pool area. The MZU and HVU are both beyond their expected service life and in poor working condition.

3.8.2. Proposed Changes

The VRF system retrofit measure and cost for Sheldon Community Center is derived from a Systems West Engineers report dated 02/29/2016. The report recommends the following:

Community Center Air Handling Unit

- Remove existing HVAC equipment including MZU-1, MZ-2, exhaust fan EF-3, the gymnasium HVU, and the heat pump (HP-1) serving room 34.
- Abandon underfloor ductwork.
- Install a DOAS on the roof west of the mechanical room. Route supply and return ducts from the AHU down through the roof to VRF fan coil units in the ceiling space of each zone.
- Install thermostats in each zone. Controls for the VRF system are provided by the VRF manufacturer. A BACnet connection to the Siemens control system is to be provided for scheduling and monitoring.

Gymnasium Air Handling Unit

- Install VRF terminal units in the existing mechanical room to serve the gymnasium.
- Route supply and return ducts from terminal units horizontally into the gymnasium. Provide duct-mounted supply diffusers and return air grilles in the gymnasium.
- Install two ceiling supply fans in the gymnasium area to help distribute supply air.
- Provide heating from the gymnasium VRF units into the mechanical room for freeze protection.

Electrical

Existing Conditions: Sheldon Pool is served at 208 volts / 3 phase by an 800 amp main switchboard. Peak utility demand for Sheldon Pool over a 12 month period is 76 kW (211 Amps at 208 volts.)

Proposed Additional Load: The VRF system would add a significant load to the existing system. There is not sufficient capacity at the main distribution panel to serve the new heat pump load.

Basis of Cost Assumption: The electrical service upgrade as part of the air-to-water heat pump Boiler Replacement is redundant but must be done as part of either project. Measure would reuse the existing 800 amp service lateral and CT enclosure and use to feed a new 480 volt 3 phase 800 amp switchboard. No added electrical system cost has been included in the basis of cost estimate for this measure.

3.8.3. Greenhouse Gas Emissions Summary

GHG savings associated with the VRF retrofit varies based on current operating use of the building and the percentage of total natural gas use of the HVAC system. Table 21 is a list of the buildings and GHG savings included in the Variable Refrigerant Flow System Retrofit measure.

Table 21. Summary of Measure Savings

Building Name	Conditioned Area	Measure Savings	MT CO2 Savings
Sheldon Pool & Comm Ctr	32,575	10%	29.0
Overpark	28,217	50%	70.3
Total	**60,792**		**99.4**

3.8.4. Cost Estimate Summary

Measure implementation cost was based on a preliminary basis of design and cost estimate for the VRF project at the Sheldon Community Center. This cost estimate has been indexed by conditioned sf and applied to the list of buildings in Table 21. Detailed cost estimates and basis of design drawings are located in the appendix of the report. Table 22 is a summary of the implementation cost for each of the buildings in the Variable Refrigerant Flow System Retrofit measure category.

Table 22 – Summary of Measure Costs

Building Name	Conditioned Area	Implementation Cost
Sheldon Pool & Comm Ctr	32,575	$1,059,339
Overpark	28,217	$917,617
Total	**60,792**	**$1,976,956**

3.9. Swimming Pool Heat Pump Domestic Hot Water (DHW) System Retrofit

3.9.1. Existing Conditions

Sheldon Pool and Echo Hollow Pool

Mechanical

Currently, potable hot water at Echo Hollow Pool and Sheldon Pool is generated by a series of 199 MBH condensing instantaneous gas-fired water heaters with no storage. Echo Hollow is served by five units and Sheldon is served by seven units. Based on preliminary analysis, both systems are oversized relative to actual load, requiring only four (4) 199 MBH units to serve the locker rooms.

Electrical

Sheldon Pool is served at 208 volts / 3 phase by an 800 amp switchboard. Peak utility demand for Sheldon Pool over a 12 month period is 76 kW (211 Amps at 208 volts.)

Echo Hollow Pool is served at 208 volts / 3 phase by an 800 amp switchboard. Peak utility demand for Echo Hollow Pool over a 12 month period is 63 kW (175 Amps at 208 volts.) Severe corrosion of existing electrical equipment indicates existing electrical equipment should be replaced.

Amazon Pool

Amazon pool is served by two (2) 250 MBH natural draft gas water heaters with 100 gallons of integral storage each. The water heaters are currently in working condition but nearing end of their expected useful life.

Amazon Pool is served at 480 volts by a 600 amp switchboard. Peak utility demand for Amazon Pool over a 12 month period is 132 kW (159 Amps at 480 volts.)

3.9.2. Proposed Changes

Sheldon Pool and Echo Hollow Pool

The DHW heat pump replacement measure consists of the addition of a new Colmac air-to-water heat pump system to operate as the primary source of DHW generation. The 199 MBH Takagi instantaneous DHW heaters would remain to act as backup during low outdoor air temperature conditions. In general, the following elements are involved:

- DHW Heat Pump: Install new 14-ton Colmac air-to-water heat pump exterior of building. Electrical service to be run from electrical room to the unit.
- Back-up DHW Heater: Tie in the (4) existing 199 MBH Takagi instantaneous condensing DHW heaters to the new system.
- New booster pump for heat pumping system.
- Install TMV upstream of the plumbing fixtures.
- Electrical: New internal electrical distribution to serve new air-to-water heat pumps. Assumes this measure would correspond to the upgrade in service described in the air-to-water heat pump Boiler Replacement described above. If this measure is done on its own, 480 Volt service must be added to serve unit.
- New controls: Comprehensive DDC controls and graphics to be installed on existing building controls.

Mechanical Room

New air-to-water heat pumping system is to be installed adjacent to the building mechanical room. New DHW piping to be installed and all connections to the existing DHW loop to be established.

Electrical

Proposed Additional Load: The Colmac heat pump electrical characteristics are 42.7 minimum circuit amps at 480 volts, 3 phase, and 50 minimum circuit amps at 480 volts. There is not sufficient capacity at the main distribution panel to serve the new heat pump load.

Basis of Cost Assumption: Implement this measure only if the electrical service is to be upgraded as part of the air-to-water heat pump Boiler Replacement measure which would reuse the existing 800 amp service lateral and CT enclosure and use to feed a new 480 volt 3 phase 800 amp switchboard. Install a new 480: 208 volt step-down transformer and re-feed the existing main distribution panel. With the service upgrade, EWEB would need to replace the existing service transformer. Cost of upgraded electrical service has not been included in the basis of cost estimate for this measure.

Amazon Pool

The DHW heat pump replacement measure at Amazon Pool consists of the addition of a new Colmac air-to-water heat pump system to operate as the primary source of DHW generation. Four (4) 199 MBH Takagi instantaneous DHW heater are proposed to be installed to act as backup during low outdoor air temperature conditions. In general, the following elements are involved:

- Remove existing water heaters.
- DHW Heat Pump: Install new 14-ton Colmac air-to-water heat pump exterior of building. Electrical service to be run from electrical room to the unit.
- Back-up DHW Heater: Install (4) 199 MBH Takagi instantaneous condensing DHW heaters.
- New booster pump for heat pumping system.
- Install TMV upstream of the plumbing fixtures.
- Electrical: New internal electrical distribution based on recommendation below.
- New controls: Comprehensive DDC controls and graphics to be installed on existing building controls.

Mechanical Room

New air-to-water heat pumping systems is to be installed adjacent to the building mechanical room. New DHW piping is to be installed and all connections to the existing DHW loop to be established.

Electrical

Proposed Additional Load: The Colmac heat pump electrical characteristics are 42.7 minimum circuit amps at 480 volts, 3 phase, and 50 minimum circuit amps at 480 volts.

Basis of Cost Assumption: There is sufficient capacity at the main distribution panel to serve the new heat pump load. Internal electric service needs upgrade to be run from the existing electrical panel.

3.9.3. Greenhouse Gas Emissions Summary

GHG savings associated with this measure vary based on current operating use of the pools and the percentage of total natural gas use associated with the pool DHW systems. Table 23 is a list of the buildings and GHG savings included in the Swimming Pool Heat Pump Domestic Hot Water System Retrofit measure.

Table 23 – Summary of Measure Savings

Building Name	Conditioned Area	Measure Savings	MT CO2 Savings
Echo Hollow Pool	15,322	15%	91.9
Sheldon Pool & Comm Ctr	32,575	20%	43.5
Amazon Pool	8,283	15%	53.2
Total	**56,180**		**189**

3.9.4. Cost Estimate Summary

Measure implementation cost was based on a preliminary basis of design and cost estimate for each of the pool projects. This cost estimate represents a reasonable cost associated with the upgrade of the DHW systems. The contingency added to each of the cost estimates represents the high level design and is not intended to represent the construction market fluctuation. Detailed cost estimates and basis of design drawings are located in the appendix of the report. Table 24 is a summary of the implementation cost for each of the buildings in the Swimming Pool Heat Pump Domestic Hot Water System Retrofit measure category.

Table 24 – Summary of Measure Costs

Building Name	Conditioned Area	Implementation Cost
Echo Hollow Pool	15,322	$157,209
Sheldon Pool & Comm Ctr	32,575	$157,209
Amazon Pool	8,283	$169,238
Total	**56,180**	**$483,656**

3.10. High Use Heat Pump Domestic Hot Water System Retrofit

3.10.1. Existing Conditions

The basis of cost for this measure is based on the Fire Station 11 retrofit. The existing conditions are similar to other recently upgraded DHW systems in city facilities with three (3) 199 MBH instantaneous water heaters.

3.10.2. Proposed Changes

The DHW heat pump replacement measure consists of the addition of a new Colmac air-to-water heat pump system to run as the primary source of DHW generation. One (1) 199 MBH Takagi instantaneous DHW heater would be installed (or remain if previously installed) to act as backup during low outdoor air temperature conditions. Solar systems will remain in place (if existing) but a retrofit recommendation is detailed in solar thermal retrofit measure description within this section of the report. In general, the following elements are involved:

- Install new 3-ton Colmac air-to-water heat pump exterior of building. Electrical service to be run from electrical room to the unit.
- Install (1) 199 MBH Takagi instantaneous condensing DHW heater.
- New booster pump for heat pumping system.
- Install TMV upstream of the plumbing fixtures.
- Electrical: New internal electrical distribution based on recommendation below.
- Comprehensive DDC controls and graphics to be installed on existing building controls.

<u>Mechanical Room</u>

New air-to-water heat pumping systems to be installed adjacent to the building mechanical room. New DHW piping to be installed and all connections to the existing DHW loop to be established.

Electrical

Existing Conditions: Fire Station 11 is served at 208 volts / 3 phase by an 800 amp switchboard. Peak utility demand for Fire Station 11 over a 12 month period is 34 kW (995 Amps at 208 volts.)

Proposed Additional Load: The Colmac heat pump electrical characteristics are 28.8 minimum circuit amps at 208 volts, and 30 minimum circuit amps at 208 volts. The existing system can handle the new load, so no added cost for electrical service upgrade has been included in this basis of cost.

3.10.3. Greenhouse Gas Emissions Summary

GHG savings associated with the heat pump DHW retrofit vary based on the percentage of natural gas the DHW system consumes. Table 25 is a list of the buildings and GHG savings included in the High Use Heat Pump Domestic Hot Water System Retrofit measure.

Table 25 – Summary of Measure Savings

Building Name	Conditioned Area	Measure Savings	MT CO2 Savings
Airport Terminal	8,283	15%	25.2
Downtown Library	130,000	15%	15.3
PWM - Bldgs# 1 ,14	4,011	15%	13.1
Hult Center	135,026	15%	8.6
Atrium Building	60,700	15%	8.4
Fire Station 1-Downtown	28,350	10%	4.8
Police/Fire Training Building	30,157	15%	6.2
Fire Station 2-Chambers	23,332	15%	5.7
Fire Station 11-Santa Clara	16,100	15%	4.1
Fire Station 9-Valley River	7,825	10%	1.9
Fire Station 6-Willakenzie	11,740	15%	2.7
Police Services Bldg	17,150	15%	2.4
Fire Station 8-Danebo	6,021	15%	2.0
Fire Station 10--Bailey Hill	5,266	15%	1.4
Fire Station 15-South Hills	5,376	15%	1.2
Fire Station 7-Bethel	2,568	15%	1.0
Fire Station 13-University	5,436	15%	0.7
Total	**497,341**		**105**

3.10.4. Cost Estimate Summary

Measure implementation cost was based on a preliminary basis of design and cost estimate for the Fire Station 11 system. This cost estimate has been indexed by sf, and applied to all other buildings listed above. Detailed cost estimates and basis of design drawings are located in the appendix of the report. Table 26 is a summary of the implementation cost for each of the buildings in the High Use Heat Pump Domestic Hot Water System Retrofit measure category.

Table 26 – Summary of Measure Costs

Building Name	Conditioned Area	Implementation Cost
Airport Terminal	8,283	$461,005
Downtown Library	130,000	$494,000
PWM - Bldgs# 1 ,14	4,011	$15,242
Hult Center	135,026	$513,099
Atrium Building	60,700	$230,660
Fire Station 1-Downtown	28,350	$107,730
Police/Fire Training Building	30,157	$114,597
Fire Station 2-Chambers	23,332	$88,662
Fire Station 11-Santa Clara	16,100	$61,180
Fire Station 9-Valley River	7,825	$29,735
Fire Station 6-Willakenzie	11,740	$44,612
Police Services Bldg	17,150	$65,170
Fire Station 8-Danebo	6,021	$22,880
Fire Station 10--Bailey Hill	5,266	$20,011
Fire Station 15-South Hills	5,376	$20,429
Fire Station 7-Bethel	2,568	$9,758
Fire Station 13-University	5,436	$20,657
Total	**497,341**	**$2,319,425**

3.11. Low Use Heat Pump Domestic Hot Water System Retrofit

3.11.1. Existing Conditions

Buildings with low-use natural gas DHW systems are assumed to be natural draft water heaters with 80 to 100 gallons of integral storage. DHW usage at these buildings is assumed to be essentially limited to hand washing and light custodial use.

3.11.2. Proposed Changes

The DHW heat pump replacement measure consists of the addition of a new Sanden SANCO$_2$ heat pump water heater to replace small residential-style gas water heaters. In general, the following elements are involved:

- Remove existing gas water heater
- Install new split system heat pump water heater
- New internal electrical distribution to serve new air-to-water heat pumps

<u>Mechanical Room</u>

New heat pumping systems are to be installed in the building mechanical room. New DHW heat pump is to be installed and all connections to the existing DHW loop to be established.

<u>Electrical</u>

Existing Conditions: The existing electrical conditions for low-use heat pump buildings are assumed to have adequate load at the panel due to the unit's residential nature.

Proposed Additional Load: The Sanden SANCO$_2$ heat pump electrical characteristics are 13 minimum circuit amps at 208 volts, and 15 minimum circuit amps at 208 volts.

3.11.3. Greenhouse Gas Emissions Summary

GHG savings associated with small DHW measure are assumed to be 5% of the total building natural gas load. Table 27 is a list of the buildings and GHG savings included in the Low Use Heat Pump Domestic Hot Water System Retrofit measure.

Table 27 – Summary of Measure Savings

Building Name	Conditioned Area	Measure Savings	MT CO2 Savings
Airport SRE I	8,890	5%	1.4
Logistics Building	23,241	5%	1.3
Lincoln Yard	6,563	5%	1.1
Airport Fire Station 12	4,851	5%	0.9
Airport ARFF Bldg-new FS	4,851	5%	0.8
SMJ House	6,121	5%	0.8
911 Center	13,320	5%	0.7
Cheshire Shop and Storage	17,080	5%	0.7
Police Headquarters	72,000	5%	0.7
Airport SRE II Building	6,808	5%	0.7
PWM - Bldg #6	4,178	5%	0.7
Campbell Community Center	7,503	5%	0.6
PWM - Bldgs #9,18	10,800	5%	0.6
Parcade	37,600	5%	0.5
PWM - Bldgs #2,3,4,5,7,8	22,000	5%	0.5
Airport Admin Building	4,178	5%	0.3
Petersen Barn Community Center	6,385	5%	0.3
McNail-Riley House	1,230	5%	0.2
Morse Ranch-Buildings	4,029	5%	0.2
Washington Park Comm Center	2,816	5%	0.2
Airport Air Cargo	5,000	5%	0.2
River House Community Center	2,329	5%	0.1
Total	**271,773**		**14**

3.11.4. Cost Estimate Summary

Measure implementation cost was based on a preliminary basis of design and cost estimate for a generic system as defined above. Cost was assumed to be identical for each building listed above. Detailed cost estimates and basis of design drawings are located in the appendix of the report. Table 28 is a summary of the implementation cost for each of the buildings in the Low Use Heat Pump Domestic Hot Water System Retrofit measure category.

Table 28 – Summary of Measure Costs

Building Name	Conditioned Area	Implementation Cost
Airport SRE I	8,890	$23,098
Logistics Building	23,241	$23,098
Lincoln Yard	6,563	$23,098
Airport Fire Station 12	4,851	$23,098
Airport ARFF Bldg-new FS	4,851	$23,098
SMJ House	6,121	$23,098
911 Center	13,320	$23,098
Cheshire Shop and Storage	17,080	$23,098
Police Headquarters	72,000	$23,098
Airport SRE II Building	6,808	$23,098
PWM - Bldg #6	4,178	$23,098
Campbell Community Center	7,503	$23,098
PWM - Bldgs #9,18	10,800	$23,098
Parcade	37,600	$23,098
PWM - Bldgs #2,3,4,5,7,8	22,000	$23,098
Airport Admin Building	4,178	$23,098
Petersen Barn Community Center	6,385	$23,098
McNail-Riley House	1,230	$23,098
Morse Ranch-Buildings	4,029	$23,098
Washington Park Comm Center	2,816	$23,098
Airport Air Cargo	5,000	$23,098
River House Community Center	2,329	$23,098
Total	**271,773**	**$508,156**

3.12. Solar Thermal Domestic Hot Water System Installation

3.12.1. Existing Conditions

Currently, Fire Station 11 and Fire Station 1 are the only fire stations equipped with solar thermal systems that are used to generate heat for potable water heating. The existing conditions for other fire stations are assumed to be similar to Fire Station 1 and 11 systems with (3) 199 MBH instantaneous water heaters.

3.12.2. Proposed Changes

The solar thermal DHW measure consists of the addition of a single HX storage tank and solar thermal system. In general, the following elements are involved:

- Install (1) 120 gallon Solar Servant DHW storage tank
- Install (3) 4' x 10' Flat Plate Glazed Solar Thermal Panels on Roof with drain-back or closed loop glycol piping loop between pre-heat storage tank and collectors
- Install TMV upstream of the plumbing fixtures
- Install (1) 125 W circulation pump
- Comprehensive DDC controls and graphics to be installed on existing building controls
- Connect new solar thermal loop to the existing DHW heating system
- Controls: Digital controls tie in with existing controls system for the building. Controls must be programmed to allow drain-back for freeze protection (if drain-back system is used for freeze protection.)

Mechanical Room/Roof: The major demolition work is in the mechanical room and consists of modifying the existing DHW system components as needed. The new system is to be installed in the mechanical room and on the roof of the building. The roof location is to be determined by solar exposure and ease of access to clean panels. Solar HW piping will penetrate the mechanical room ceiling and be plumbed to the location of the solar thermal panels on the roof. Reestablish all connections to the existing DHW. Install TMV downstream of the new Solar Servant tanks to mix the DHW from the tank to 110 degrees F for the DHW fixtures.

3.12.3. Greenhouse Gas Emissions Summary

GHG savings associated with the solar thermal system measure are assumed to be 5% of the total building natural gas load. Table 29 is a list of the buildings and GHG savings included in the Solar Thermal Domestic Hot Water System Installation measure.

Table 29 – Summary of Measure Savings

Building Name	Conditioned Area	Measure Savings	MT CO2 Savings
Fire Station 9-Valley River	7,825	5%	0.9
Fire Station 6-Willakenzie	11,740	5%	0.9
Police Headquarters	72,000	5%	0.7
Fire Station 8-Danebo	6,021	5%	0.7
Fire Station 10--Bailey Hill	5,266	5%	0.5
Fire Station 15-South Hills	5,376	5%	0.4
Fire Station 7-Bethel	2,568	5%	0.3
Fire Station 13-University	5,436	5%	0.2
Total	**116,232**		**5**

3.12.4. Cost Estimate Summary

Measure implementation cost was based on a preliminary basis of design and cost estimate for Fire Station 11 (assuming that it would receive a new solar system.) This cost estimate was indexed based on sf, and applied to the buildings listed above. Detailed cost estimates and basis of design drawings are located in the appendix of the report. Table 30 is a summary of the implementation cost for each of the buildings in the Solar Thermal Domestic Hot Water System Installation measure category.

Table 30 – Summary of Measure Costs

Building Name	Conditioned Area	Implementation Cost
Fire Station 9-Valley River	7,825	$15,885
Fire Station 6-Willakenzie	11,740	$23,832
Police Headquarters	72,000	$146,160
Fire Station 8-Danebo	6,021	$12,223
Fire Station 10--Bailey Hill	5,266	$10,690
Fire Station 15-South Hills	5,376	$10,913
Fire Station 7-Bethel	2,568	$5,213
Fire Station 13-University	5,436	$11,035
Total	**116,232**	**$235,951**

3.13. Solar Thermal Domestic Hot Water System Retrofit

3.13.1. Existing Conditions

Currently, Fire Station 1 and 11 are equipped with solar thermal systems that include three (3) 4'x10' glazed solar collectors on the roof and a large drainback/ thermal storage tank located in the mechanical room. The existing systems act as one-pass systems that run the make-up water through the drainback tank prior to running through

three (3) 199 MBH instantaneous water heaters. During site observation, the solar thermal system was adding approximately 10 degrees of heat to the make-up water.

3.13.2. Proposed Changes

The solar thermal DHW retrofit measure consists of modifications to the existing DHW solar thermal system to allow solar thermal storage tank to heat an 80 gallon storage vessel rather than acting as a one-pass system.

- Install (1) 80 gallon Solar Servant DHW storage tank.
- Install new piping to create a recirculation loop through the thermal mass/ drainback tank.
- Install new recirculation pump.
- Install thermostatic mixing valve (TMV) upstream of the plumbing fixtures.
- New control valves to allow recirculation of storage tank water through thermal tank.
- Controls: Digital controls to tie in with existing building control system. Controls must be programmed to allow drainback for freeze protection.

Mechanical Room/Roof

The existing system would be retrofitted by adding DHW piping between the DHW loop and the solar thermal loop to create a recirculation loop. A TMV would be installed downstream of the new solar tanks to mix the DHW from the tank to 110 degrees F for the DHW fixtures.

3.13.3. Greenhouse Gas Emissions Summary

GHG savings associated with the solar thermal system measure are assumed to be 5% of the total building natural gas load. Table 31 is a list of the buildings and GHG savings included in the Solar Thermal Domestic Hot Water System Installation measure.

Table 31 – Summary of Measure Savings

Building Name	Conditioned Area	Measure Savings	MT CO2 Savings
Fire Station 1-Downtown	28,350	5%	2.4
Fire Station 11-Santa Clara	16,100	5%	1.4
Total	**44,450**		**4**

3.13.4. Cost Estimate Summary

Measure implementation cost was based on a preliminary basis of design and cost estimate developed for Fires Station 11. This cost estimate was indexed by sf and applied to Fire Station 1 as well. Detailed cost estimates and basis of design drawings are located in the appendix of the report. Table 32 is a summary of the implementation cost for each of the buildings in the Solar Thermal Domestic Hot Water System Retrofit measure category.

Table 31 – Summary of Measure Costs

Building Name	Conditioned Area	Implementation Cost
Fire Station 1-Downtown	28,350	$20,129
Fire Station 11-Santa Clara	16,100	$11,440
Total	**44,450**	**$31,569**

4.0 Greenhouse Gas Emissions Factors

4.1. Carbon Footprint Calculations

The goal for this carbon emission reduction cost analysis is to identify a number of cost paths or scenarios that reduce carbon emissions associated with building energy performance. Translating energy used in a building to carbon dioxide emissions at the energy source requires some reasonable assumptions to be made. The following assumptions have been used in the carbon calculations performed in developing this document:

- *Electricity:* The emissions factor used for 2010 is 0.066 lb CO2 per kWh used on site and in 2016 that number was reduced to 0.029 lb CO2 per kWh used on site. This reflects a portfolio that contains almost no fossil fuel generation. These factors were provided by the Oregon Department of Environmental Quality (DEQ) and are used in the City's GHG inventories.
- *Natural gas:* The emissions factor for natural gas used for both 2010 and 2016 is 11.7 lbs CO2 per therm. This is the generally accepted emissions factors for one therm (100,000 Btu) of natural gas combusted on site.
- *Steam:* The emissions factor for steam used on site in 2010 is 234 lb CO2 per MMBtu used on site. This is the emissions factor used for other steam customer GHG calculations done prior to the closing of the EWEB steam system. It assumes the following general operational parameters:
    - The EWEB steam system operated with an average fuel conversion efficiency of about 80%
    - Distribution system losses averaged about 30%
    - Therefore, every usable unit of steam energy delivered in 2010 was equivalent to two input units of natural gas energy combusted at the EWEB steam plant.

Table 33 summarizes the emissions factor used in the carbon calculations for each year and each fuel type.

Table 33 - Summary of GHG Emissions Factors.

Energy Type	Source	Unit of Energy	lb of CO2 per Unit (2010)	lb of CO2 per kBtu (2010)	lb of CO2 per Unit (2016)	lb of CO2 per kBtu (2016)
Electricity	EWEB	kWh	0.066	0.019	0.029	0.008
Natural Gas	NW Natural	Therm	11.7	0.117	11.7	0.117
Steam	EWEB	MMBtu	234	0.234	N/A	N/A

Note: The conversion from pounds of CO2 to metric tons (MT) of CO2 is 2,204.62 pounds per MT.

5.0 Appendix

5.1 Building Greenhouse Gas Reduction Matrix

5.2 Basis of Cost Estimates

5.3 Basis of Design Drawings

5.4 LCCA Spreadsheets and Graphs

5.5 McKinsey GHG Abatement Cost Curve

5.6 Product Cut Sheet

5.1. Building Greenhouse Gas Reduction Matrix

5.1.1. Building Greenhouse Reduction Summary Table

Table 34 contains a summary of each measure category that is applicable to each of the gas using buildings in the City of Eugene.

Table 34 – Summary of Applicable Measures on a Building-by-Building Basis

Building Name	Conditioned Area	Natural Gas MT CO2	Electric MT CO2	ReCx	Pool Boiler	New Pool Solar	Retrofit Pool Solar	HVAC Boiler	HVAC RTU	HVAC Furnace	VRF	New Solar Thermal	Retrofit Solar Thermal	Pool DHW	Large DHW2	Small DHW	Radiant Heaters
Echo Hollow Pool	15,322	459.5	5.0	X	X	X								X			
Sheldon Pool & Comm Ctr	32,575	290.3	5.2	X	X	X	X				X			X			
Amazon Pool	8,283	266.0	6.4	X	X		X							X			
Airport Terminal	121,317	168.1	37.4	X				X							X		
Overpark	28,217	140.6	14.4	X							X						
Downtown Library	130,000	101.9	24.4	X				X							X		
PWM - Bldgs# 1 ,14	4,011	87.5	5.4	X						X					X		X
Hult Center	135,026	57.4	15.4	X				X							X		
Atrium Building	60,700	55.8	5.5	X				X							X		
Fire Station 1-Downtown	28,350	47.7	3.0	X				X					X		X		X
Police/Fire Training Building	30,157	41.2	3.5	X				X							X		X
Fire Station 2-Chambers	23,332	38.0	2.6	X					X						X		X
Airport SRE I	8,890	27.7	0.7	X					X							X	X
Fire Station 11-Santa Clara	16,100	27.5	1.5	X						X			X		X		X
Logistics Building	23,241	26.5	1.6	X					X							X	X
Lincoln Yard	6,563	21.8	0.9	X					X							X	X
Fire Station 9-Valley River	7,825	18.6	0.7	X						X		X			X		X
Fire Station 6-Willakenzie	11,740	17.8	1.7	X						X		X			X		
Airport Fire Station 12	4,851	17.1	2.0	X						X						X	
Airport ARFF Bldg-new FS	4,851	16.7	1.6	X						X						X	
Police Services Bldg	17,150	16.2	2.8	X					X						X		X
SMJ House	6,121	16.0	0.2							X						X	
911 Center	13,320	14.7	5.2						X							X	
Cheshire Shop and Storage	17,080	14.7	1.0							X						X	X
Police Headquarters	72,000	14.1	17.4						X			X				X	
Airport SRE II Building	6,808	13.8	0.3							X						X	X
Fire Station 8-Danebo	6,021	13.5	0.6							X		X			X		X
PWM - Bldg #6	4,178	13.4	1.6							X						X	X
Campbell Community Center	7,503	12.8	1.4						X							X	
PWM - Bldgs #9,18	10,800	11.4	1.0							X						X	X
Parcade	37,600	10.4	10.3								X					X	
PWM - Bldgs #2,3,4,5,7,8	22,000	9.6	2.2							X						X	X
Fire Station 10--Bailey Hill	5,266	9.4	0.7							X		X			X		X
Fire Station 15-South Hills	5,376	8.0	0.7							X		X			X		X
Airport Admin Building	4,178	6.8	1.7							X						X	
Fire Station 7-Bethel	2,568	6.6	0.6							X		X			X		X
Petersen Barn Community Center	6,385	5.7	0.7							X						X	
Fire Station 13-University	5,436	4.6	0.6							X		X			X		X
McNail-Riley House	1,230	4.4	0.0							X						X	
Morse Ranch-Buildings	4,029	4.1	0.1							X						X	
Washington Park Comm Center	2,816	4.0	0.2							X						X	
Airport Air Cargo	5,000	3.8	1.7							X						X	X
River House Community Center	2,329	2.6	0.2							X						X	

5.2. Basis of Cost Estimates

5.2.1. Boiler Replacement for Swimming Pool Heating Water Systems

City of Eugene Basis of Cost								
Echo Hollow Pool								
Heat Pump Boiler Retrofit								
			Materials		Labor			
			Unit	Amount	Unit	Amount	Total	
Description	Quan.	Units	price	$	price	$	$	Update Notes
Hardcost (including subs OH&P)								
Demolition								
Steam Boiler Demo	1	ea	-	-	4,458.00	4,458	$4,458	Means 2017
Steam Piping	100	ft	-	-	2.38	238	$238	Means 2017
Heat Exchangers	3	ea	-	-	500.00	1,500	$1,500	Means 2017
Air-to-Water Heat Pump								
220 Ton Airstack Heat Pump	220	ton	1,083.00	238,260	48,000.00	48,000	$286,260	Vendor Quote/Estimate: 4 man crew/15 days/$100/hr
70 Ton Airstack Heat Pump	70	ton	1,375.00	96,250	24,000.00	24,000	$120,250	Vendor Quote/Estimate: 3 man crew/10 days/$100/hr
Heat Exchanger								
Plate and Frame HX 2300 MBH	1	ea	8,820.00	8,820	7,200.00	7,200	$16,020	Vendor Quote/ Estimate: 3 man crew/3 days/$100/hr
Plate and Frame HX 350 MBH	1	ea	4,030.00	4,030	2,400.00	2,400	$6,430	Vendor Quote/ Estimate: 3 man crew/1 day/$100/hr
Pumps								
New Pump 2300 MBH HX	1	ea	6,925.00	6,925	1,600.00	1,600	$8,525	Means 2017/ Estimate: 2 man crew/1 days/$100/hr
New Pump 350 MBH HX	1	ea	4,375.00	4,375	1,600.00	1,600	$5,975	Means 2017/ Estimate: 2 man crew/1 days/$100/hr
New Pump Outdoor Pool HW Loop	1	ea	6,925.00	6,925	1,600.00	1,600	$8,525	Means 2017/ Estimate: 2 man crew/1 days/$100/hr
New Pump Indoor Pool HW Loop	1	ea	4,375.00	4,375	1,600.00	1,600	$5,975	Means 2017/ Estimate: 2 man crew/1 days/$100/hr
New Pump Nat HW Loop	1	ea	4,375.00	4,375	1,600.00	1,600	$5,975	Means 2017/ Estimate: 2 man crew/1 days/$100/hr
Boiler								
1000 MBH Condensing Boiler	3	ea	18,150.00	54,450	20,350.00	61,050	$115,500	Means 2017
Heating Coils								
New Low Temp HW Coil	1	ea	2,400.00	2,400	505.00	505	$2,905	Means 2017
Piping and Fittings								
6" Pipe	300	L.F.	69.00	20,700	41.87	12,560	$33,260	Means 2017 + 50% Adder
4" Pipe	200	L.F.	26.78	5,355	26.04	5,208	$10,563	Means 2017 + 50% Adder
Fittings, Valves, Appurtenances	1	ea	200%	52,110	200%	35,535	$87,645	200% adder on straight length pipe
Piping Insulation								
6" Pipe Insulation	300	L.F.	5.69	1,706	7.28	2,183	$3,888	Means 2017 + 50% Adder
4" Pipe Insulation	200	L.F.	4.71	942	5.82	1,164	$2,106	Means 2017 + 50% Adder
Electrical Service								
New Switchboard	1	ea	$7,000	7,000	1,000.00	1,000	$8,000	Electrical Engineer Estimate
Service Extension Conduit / Wire	20	ea	$75	1,500	125.00	2,500	$4,000	Electrical Engineer Estimate
208 volt Switchboard	1	ea	$5,000	5,000	1,000.00	1,000	$6,000	Electrical Engineer Estimate
Equip Connection & Circuits	2	ea	$1,000	2,000	5,000.00	10,000	$12,000	Electrical Engineer Estimate
Transformer	1	ea	$6,000	6,000	2,000.00	2,000	$8,000	Electrical Engineer Estimate
208 Volt Feeder	50	ea	$40	2,000	60.00	3,000	$5,000	Electrical Engineer Estimate
Equip Connection & Circuits	2	ea	$2,000	4,000	8,000.00	16,000	$20,000	Electrical Engineer Estimate
Controls								
Control Points	50	ea	500.00	25,000	300.00	15,000	$40,000	Analyst Estimate
Subtotal							$828,998	
Subtotal Incremental Cost (EEM-Base)							$828,998	
GC Mark-ups on Hard Costs								
General Conditions / General Requirements						5.00%	$41,450	
General Contractor's OH&P						25.00%	$207,249	
General Contractor's Fee and Ins						5.00%	$53,885	
TOTAL DIRECT COST							$1,131,582	
Project Management Fee						3.0%	$33,947	
Architect / Engineering Design						10.0%	$113,158	
A/E CA						1.0%	$11,316	
Commissioning Agent Fee						2.0%	$16,580	
Permit						1.0%	$11,316	
Estimating contingency						20.0%	$263,580	
Mark-up Subtotal						40%	$449,897	
Total Cost							**$1,581,479**	

City of Eugene Basis of Cost

Sheldon Pool and Community Center

Heat Pump Boiler Retrofit

			Materials		Labor			
			Unit	Amount	Unit	Amount	Total	
Description	Quan.	Units	price	$	price	$	$	Update Notes
Hardcost (including subs OH&P)								
Demolition								
Steam Boiler Demo	1	ea	-	-	4,458.00	4,458	$4,458	Means 2017
Steam Piping	100	ft	-	-	2.38	238	$238	Means 2017
Heat Exchangers	3	ea	-	-	500.00	1,500	$1,500	Means 2017
Air-to-Water Heat Pump								
83 Ton Airstack Heat Pump	83	ton	1,375.00	114,125	24,000.00	24,000	$138,125	Vendor Quote/Estimate: 3 man crew/10 days/$100/hr
70 Ton Airstack Heat Pump	70	ton	1,375.00	96,250	24,000.00	24,000	$120,250	Vendor Quote/Estimate: 3 man crew/10 days/$100/hr
Heat Exchanger								
Plate and Frame HX 500 MBH	1	ea	4,200.00	4,200	2,400.00	2,400	$6,600	Vendor Quote/ Estimate: 3 man crew/1 day/$100/hr
Plate and Frame HX 350 MBH	1	ea	4,030.00	4,030	2,400.00	2,400	$6,430	Vendor Quote/ Estimate: 3 man crew/1 day/$100/hr
Pumps								
New Pump 500 MBH HX	1	ea	4,025.00	4,025	1,600.00	1,600	$5,625	Means 2017/ Estimate: 2 man crew/1 days/$100/hr
New Pump 350 MBH HX	1	ea	4,375.00	4,375	1,600.00	1,600	$5,975	Means 2017/ Estimate: 2 man crew/1 days/$100/hr
New Pump Pool HW Loop	1	ea	4,025.00	4,025	1,600.00	1,600	$5,625	Means 2017/ Estimate: 2 man crew/1 days/$100/hr
New Pump Nat HW Loop	1	ea	4,375.00	4,375	1,600.00	1,600	$5,975	Means 2017/ Estimate: 2 man crew/1 days/$100/hr
Boiler								
1000 MBH Condensing Boiler	2	ea	18,150.00	36,300	20,350.00	40,700	$77,000	Placeholder
Heating Coils								
New Low Temp HW Coil	1	ea	2,400.00	2,400	505.00	505	$2,905	Means 2017
Piping and Fittings								
6" Pipe	300	L.F.	69.00	20,700	41.87	12,560	$33,260	Means 2017 + 50% Adder
Fittings, Valves, Appurtenances	1	ea	200%	41,400	200%	25,119	$66,519	200% adder on straight length pipe
Piping Insulation								
6" Pipe Insulation	300	L.F.	5.69	1,706	7.28	2,183	$3,888	Means 2017 + 50% Adder
Electrical Service								
New Switchboard	1	ea	7,000.00	7,000	1,000.00	1,000	$8,000	Electrical Engineer Estimate
Service Extension Conduit / Wire	20	ea	75.00	1,500	125.00	2,500	$4,000	Electrical Engineer Estimate
Refeed 208 volt Switchboard	1	ea	200.00	200	800.00	800	$1,000	Electrical Engineer Estimate
Equip Connection & Circuits	2	ea	1,200.00	2,400	4,800.00	9,600	$12,000	Electrical Engineer Estimate
Transformer	1	ea	6,000.00	6,000	2,000.00	2,000	$8,000	Electrical Engineer Estimate
208 Volt Feeder	50	ea	34.00	1,700	66.00	3,300	$5,000	Electrical Engineer Estimate
Equip Connection & Circuits	2	ea	2,000.00	4,000	8,000.00	16,000	$20,000	Electrical Engineer Estimate
Controls								
Control Points	100	ea	500.00	50,000	300.00	30,000	$80,000	Analyst Estimate
Structural Upgrade								
Roof Structure Upgrade	1	ea	5,000.00	5,000	5,000.00	5,000	$10,000	Analyst Estimate
Subtotal							$632,373	
Subtotal Incremental Cost (EEM-Base)							$632,373	
GC Mark-ups on Hard Costs								
General Conditions / General Requirements						5.00%	$31,619	
General Contractor's OH&P						25.00%	$158,093	
General Contractor's Fee and Ins						5.00%	$41,104	
TOTAL DIRECT COST							$863,188	
Project Management Fee						3.0%	$25,896	
Architect / Engineering Design						10.0%	$86,319	
A/E CA						1.0%	$8,632	
Commissioning Agent Fee						2.0%	$12,647	
Permit						1.0%	$8,632	
Estimating contingency						20.0%	$201,063	
Mark-up Subtotal						40%	$343,189	
Total Cost							**$1,206,377**	

City of Eugene Basis of Cost

Amazon Pool

Heat Pump Boiler Retrofit

			Materials		Labor			
			Unit	Amount	Unit	Amount	Total	
Description	Quan.	Units	price	$	price	$	$	Update Notes
Hardcost (including subs OH&P)								
Air-to-Water Heat Pump								
426 Ton Airstack Heat Pump	426	ton	1,083.00	461,358	72,000.00	72,000	$533,358	Vendor Quote/Estimate: 6 man crew/15 days/$100/hr
Heat Exchanger								
Plate and Frame HX 4400 MBH	1	ea	10,815.00	10,815	4,800.00	4,800	$15,615	Vendor Quote/ Estimate: 3 man crew/2 days/$100/hr
Plate and Frame HX 1500 MBH	2	ea	8,200.00	16,400	7,200.00	7,200	$23,600	Vendor Quote/ Estimate: 3 man crew/3 days/$100/hr
Plate and Frame HX 825 MBH	1	ea	4,675.00	4,675	2,400.00	2,400	$7,075	Vendor Quote/ Estimate: 3 man crew/1 day/$100/hr
Pumps								
New Booster Pump	1	ea	4,375.00	4,375	1,600.00	1,600	$5,975	Means 2017/ Estimate: 2 man crew/1 days/$100/hr
Boiler								
1000 MBH Condensing Boiler	2	ea	18,150.00	36,300	20,350.00	40,700	$77,000	Means 2017
Piping and Fittings								
6" Pipe	200	L.F.	69.00	13,800	41.87	8,373	$22,173	Means 2017 + 50% Adder
Fittings, Valves, Appurtenances	1	ea	200%	27,600	200%	16,746	$44,346	200% adder on straight length pipe
Piping Insulation								
6" Pipe Insulation	200	L.F.	5.69	1,137	7.28	1,455	$2,592	Means 2017 + 50% Adder
Electrical Service								
New Switchboard	1	ea	7,000.00	7,000	1,000.00	1,000	$8,000	Electrical Engineer Estimate
Service Conduit / Wire	80	ea	30.00	2,400	50.00	4,000	$6,400	Electrical Engineer Estimate
Feeder Retermination	6	ea	83.00	498	417.00	2,502	$3,000	Electrical Engineer Estimate
Equip Connection & Circuits	2	ea	1,000.00	2,000	5,000.00	10,000	$12,000	Electrical Engineer Estimate
Boiler Room Panel	1	ea	4,000.00	4,000	1,000.00	1,000	$5,000	Electrical Engineer Estimate
Controls								
Control Points	40	ea	500.00	20,000	300.00	12,000	$32,000	Analyst Estimate
Subtotal							$798,134	
Subtotal Incremental Cost (EEM-Base)							$798,134	
GC Mark-ups on Hard Costs								
General Conditions / General Requirements						5.00%	$39,907	
General Contractor's OH&P						25.00%	$199,534	
General Contractor's Fee and Ins						5.00%	$51,879	
TOTAL DIRECT COST							$1,089,453	
Project Management Fee						3.0%	$32,684	
Architect / Engineering Design						10.0%	$108,945	
A/E CA						1.0%	$10,895	
Commissioning Agent Fee						2.0%	$15,963	
Permit						1.0%	$10,895	
Estimating contingency						20.0%	$253,767	
Mark-up Subtotal						40%	$433,147	
Total Cost							**$1,522,600**	

5.2.2. Solar Thermal Heating Water System Addition for Swimming Pools

City of Eugene Basis of Cost								
Echo Hollow Pool								
Solar Thermal Heating Water System Addition								
			Materials		Labor			
			Unit	Amount	Unit	Amount	Total	
Description	Quan.	Units	price	$	price	$	$	Update Notes
Hardcost (including subs OH&P)								
New Solar								
4' x 10' Unglazed Collector	187	ea	226.00	42,262	250.00	46,750	$89,012	Online Pricing/Means 2017
Frame & Strapping	748	L.F.	28.23	21,117	8,000.00	8,000	$29,117	Means 2017/ Estimate: 2 man crew/5 days/$100/hr
4" Pipe	150	L.F.	26.78	4,016	26.04	3,906	$7,922	Means 2017 + 50% Adder
Valves, Controllers, Appurtanances	1	ea	901.29	901	462.78	463	$1,364	Means 2017
Controls								
Control Points	10	ea	500.00	5,000	300.00	3,000	$8,000	Analyst Estimate
Subtotal							$135,415	
Subtotal Incremental Cost (EEM-Base)							$135,415	
GC Mark-ups on Hard Costs								
General Conditions / General Requirements						5.00%	$6,771	
General Contractor's OH&P						25.00%	$33,854	
General Contractor's Fee and Ins						5.00%	$8,802	
TOTAL DIRECT COST							$184,841	
Project Management Fee						3.0%	$5,545	
Architect / Engineering Design						10.0%	$18,484	
A/E CA						1.0%	$1,848	
Commissioning Agent Fee						2.0%	$2,708	
Permit						1.0%	$1,848	
Estimating contingency						40.0%	$86,110	
Mark-up Subtotal						63%	$116,545	
Total Cost							**$301,386**	

City of Eugene Basis of Cost

Sheldon Dive Pool

Solar Thermal Heating Water System Addition

			Materials		Labor			
			Unit	Amount	Unit	Amount	Total	
Description	Quan.	Units	price	$	price	$	$	Update Notes
Hardcost (including subs OH&P)								
New Solar								
4' x 10' Unglazed Collector	37	ea	226.00	8,362	250.00	9,250	$17,612	Online Pricing/Means 2017
Frame & Strapping	148	L.F.	28.23	4,178	8,000.00	8,000	$12,178	Means 2017/ Estimate: 2 man crew/5 da
4" Pipe	150	L.F.	26.78	4,016	26.04	3,906	$7,922	Means 2017 + 50% Adder
Valves, Controllers, Appurtanances	1	ea	901.29	901	462.78	463	$1,364	Means 2017
Controls								
Control Points	10	ea	500.00	5,000	300.00	3,000	$8,000	Analyst Estimate
Subtotal							$47,076	
Subtotal Incremental Cost (EEM-Base)							$47,076	
GC Mark-ups on Hard Costs								
General Conditions / General Requirements						5.00%	$2,354	
General Contractor's OH&P						25.00%	$11,769	
General Contractor's Fee and Ins						5.00%	$3,060	
TOTAL DIRECT COST							$64,259	
Project Management Fee						3.0%	$1,928	
Architect / Engineering Design						10.0%	$6,426	
A/E CA						1.0%	$643	
Commissioning Agent Fee						2.0%	$942	
Permit						1.0%	$643	
Estimating contingency						40.0%	$29,936	
Mark-up Subtotal						63%	$40,516	
Total Cost							**$104,776**	

5.2.3. Solar Thermal Heating Water System Retrofit for Swimming Pools

City of Eugene Basis of Cost								
Amazon Pool								
Solar Thermal Heating Water System Updrade								
			Materials		Labor			
			Unit	Amount	Unit	Amount	Total	
Description	Quan.	Units	price	$	price	$	$	Update Notes
Hardcost (including subs OH&P)								
New Solar								
4' x 10' Glazed Flat Plate Collector	84	ea	1,049.97	88,197	250.00	21,000	$109,197	Online Pricing/Means 2017
Frame & Strapping	336	L.F.	28.23	9,486	8,000.00	8,000	$17,486	Means 2017/ Estimate: 2 man crew/5 days/$100/hr
Piping	150	L.F.	26.78	4,016	26.04	3,906	$7,922	Means 2017 + 50% Adder
Valves, Controllers, Appurtanances	1	ea	901.29	901	462.78	463	$1,364	Means 2017
Controls								
Control Points	10	ea	500.00	5,000	300.00	3,000	$8,000	Analyst Estimate
Subtotal							$143,969	
Subtotal Incremental Cost (EEM-Base)							$143,969	
GC Mark-ups on Hard Costs								
General Conditions / General Requirements						5.00%	$7,198	
General Contractor's OH&P						25.00%	$35,992	
General Contractor's Fee and Ins						5.00%	$9,358	
TOTAL DIRECT COST							$196,518	
Project Management Fee						3.0%	$5,896	
Architect / Engineering Design						10.0%	$19,652	
A/E CA						1.0%	$1,965	
Commissioning Agent Fee						2.0%	$2,879	
Permit						1.0%	$1,965	
Estimating contingency						40.0%	$91,550	
Mark-up Subtotal						63%	$123,907	
Total Cost							**$320,425**	

5.2.4. Boiler Replacement for Building Heating Water Systems

City of Eugene Basis of Cost								
Eugene Airport								
Air-to-Water Heat Pump Retrofit								
			Materials		Labor			
			Unit	Amount	Unit	Amount	Total	
Description	Quan.	Units	price	$	price	$	$	Update Notes
Hardcost (including subs OH&P)								
Air-to-Water Heat Pump								
180 Ton Airstack Heat Pump	180	Ton	1,155.00	207,900	48,000.00	48,000	$255,900	Vendor Quote/Estimate: 4 man crew/15 days/$100/hr
Piping and Fittings								
6" Pipe	300	L.F.	69.00	20,700	41.87	12,560	$33,260	Means 2017 + 50% Adder
Fittings, Valves, Appurtenances	1	ea	2.00	41,400	2.00	25,119	$66,519	200% adder on straight length pipe
Piping Insulation								
6" Pipe Insulation	300	L.F.	5.69	1,706	7.28	2,183	$3,888	Means 2017 + 50% Adder
HW Distribution								
Distributed HW Coils & Piping	121,317	Bldg.sf	1.50	181,976	1.50	181,976	$363,951	HW Distribution Analyst Estimate
Electrical Service								
New Sbd Fusible Switch	1	ea	3,200.00	3,200	800.00	800	$4,000	Electrical Engineer Estimate
Feeder	50	ea	-	-	150.00	7,500	$7,500	Electrical Engineer Estimate
Equip Connection & Circuits	2	ea	-	-	6,000.00	12,000	$12,000	Electrical Engineer Estimate
Boiler Room Panel	1	ea	-	-	5,000.00	5,000	$5,000	Electrical Engineer Estimate
Subtotal							$723,518	
Subtotal Incremental Cost (EEM-Base)							$723,518	
GC Mark-ups on Hard Costs								
General Conditions / General Requirements						5.00%	$36,176	
General Contractor's OH&P						25.00%	$180,879	
General Contractor's Fee and Ins						5.00%	$47,029	
TOTAL DIRECT COST							$987,601	
Project Management Fee						3.0%	$29,628	
Architect / Engineering Design						10.0%	$98,760	
A/E CA						1.0%	$9,876	
Commissioning Agent Fee						2.0%	$14,470	
Permit						1.0%	$9,876	
Estimating contingency						20.0%	$230,042	
Mark-up Subtotal						40%	$392,653	
Total Cost							**$1,380,254**	

5.2.5. Packaged Gas-Pack Roof Top Unit Replacement

City of Eugene Basis of Cost								
Police Headquarters								
Packaged Gas-Pack Roof Top Unit Replacement								
			Materials		Labor			
			Unit	Amount	Unit	Amount	Total	
Description	Quan.	Units	price	$	price	$	$	Update Notes
Hardcost (including subs OH&P)								
RTU Demo								
7.5-Ton Heat Pump	1	ea		-	738.78	739	$739	Means 2017
50-Ton Heat Pump	2	ea		-	1,197.33	2,395	$2,395	Means 2017
Split System Heat Pumps								
7.5-Ton Heat Pump	1	ea	5,700.00	5,700	4,800.00	4,800	$10,500	Vendor Quote/Estimate: 3 man crew/2 c
25-Ton Heat Pump	4	ea	20,700.00	82,800	24,000.00	24,000	$106,800	Vendor Quote/Estimate: 3 man crew/10
Ductwork								
Ducting	100	ft	3.74	374	4.36	436	$810	Means 2017 + 100% Adder
Hangers and Connections	1	ea	2.00	748	2.00	872	$1,620	
Roof Penetration								
Penetration and Repair	2	ea	2,000.00	4,000	3,000.00	6,000	$10,000	Analyst Estimate
Electrical Service Upgrades								
Service Upgrade From Panel	5	ea	1,000.00	5,000	3,000.00	15,000	$20,000	Electrical Engineer Estimate
Controls								
Connection to Existing Controls	40	points	300.00	12,000	500.00	20,000	$32,000	Analyst Estimate
Subtotal Incremental Cost (EEM-Base)							$184,863	
GC Mark-ups on Hard Costs								
General Conditions / General Requirements						5.00%	$9,243	
General Contractor's OH&P						25.00%	$46,216	
General Contractor's Fee and Ins						5.00%	$12,016	
TOTAL DIRECT COST							$252,339	
Project Management Fee						3.0%	$7,570	
Architect / Engineering Design						5.0%	$12,617	
A/E CA						1.0%	$2,523	
Commissioning Agent Fee						2.0%	$3,697	
Permit						1.0%	$2,523	
Estimating contingency						25.0%	$70,317	
Mark-up Subtotal						39%	$99,249	
Total Cost							**$351,587**	

5.2.6. Natural Gas Furnace Replacement

City of Eugene Basis of Cost								
Fire Station 11								
Gas Furnace Replacement								
			Materials		Labor			
			Unit	Amount	Unit	Amount	Total	
Description	Quan.	Units	price	$	price	$	$	Update Notes
Hardcost (including subs OH&P)								
Split System Heat Pumps								
3-Ton Heat Pump	1	ea	1,908.00	1,908	1,088.92	1,089	$2,997	Vendor Quote/Means 2017
5-Ton Heat Pump	5	ea	2,466.00	12,330	2,297.70	11,489	$23,819	Vendor Quote/Means 2017
7.5 Ton Heat Pump	1	ea	4,266.00	4,266	3,071.93	3,072	$7,338	Vendor Quote/Means 2017
Electrical Service Upgrades								
Service Upgrade From Panel	7	ea	1,000.00	7,000	3,000.00	21,000	$28,000	Electrical Engineer Estimate
Controls								
Connection to Existing Controls	21	points	300.00	6,300	500.00	10500	$16,800	Analyst Estimate
Subtotal Incremental Cost (EEM-Base)							$78,953	
GC Mark-ups on Hard Costs								
General Conditions / General Requirements						5.00%	$3,948	
General Contractor's OH&P						25.00%	$19,738	
General Contractor's Fee and Ins						5.00%	$5,132	
TOTAL DIRECT COST							$107,771	
Project Management Fee						3.0%	$3,233	
Architect / Engineering Design						10.0%	$10,777	
A/E CA						1.0%	$1,078	
Commissioning Agent Fee						2.0%	$1,579	
Permit						1.0%	$1,078	
Estimating contingency						20.0%	$25,103	
Mark-up Subtotal						40%	$42,848	
Total Cost							**$150,619**	

5.2.7. Variable Refrigerant Flow System Retrofit

City of Eugene Basis of Cost								
Sheldon Pool and Community Center								
VRF System Retrofit								
			Materials		Labor			
			Unit	Amount	Unit	Amount	Total	
Description	Quan.	Units	price	$	price	$	$	Update Notes
Hardcost (including subs OH&P)								
VRF System								
Community Center VRF System	12,000	sf	20.33	243,900	6.78	81,300	$325,200	Systems West Estimate (75%/25%
Subtotal							$325,200	material and cost split)
Subtotal Incremental Cost (EEM-Base)							$325,200	
GC Mark-ups on Hard Costs								
General Conditions / General Requirements						0.00%	$0	Systems West Estimate
General Contractor's OH&P						0.00%	$0	Systems West Estimate
General Contractor's Fee and Ins						0.00%	$0	Systems West Estimate
TOTAL DIRECT COST							$325,200	
Project Management Fee						0.0%	$0	Systems West Estimate
Architect / Engineering Design						0.0%	$0	Systems West Estimate
A/E CA						0.0%	$0	Systems West Estimate
Commissioning Agent Fee						0.0%	$0	Systems West Estimate
Permit						0.0%	$0	Systems West Estimate
Estimating contingency						20.0%	$65,040	Added to Systems West Estimate
Mark-up Subtotal						20%	$65,040	
Total Cost							**$390,240**	

5.2.8. Swimming Pool Heat Pump Domestic Hot Water System Retrofit

City of Eugene Basis of Cost								
Sheldon and Echo Hollow Pool								
Heat Pump Water Heater								
			Materials		Labor			
			Unit	Amount	Unit	Amount	Total	
Description	Quan.	Units	price	$	price	$	$	Update Notes
Hardcost (including subs OH&P)								
Storage Tanks								
120 Gallon Storage Tank	2	ea	1,358.00	2,716	800.00	800	$3,516	Online Pricing/Estimate: 1 man crew/1 days/$100/hr
Pumps								
Grundfos HW Pump 230V	1	ea	245.00	245	400.00	400	$645	Online Pricing/Estimate: 1 man crew/0.5 days/$100/hr
Thermostatic Mixing Valve								
1" TMV	1	ea	1,307.00	1,307	250.00	250	$1,557	Online Pricing/Estimate: 1 man crew/0.25 days/$100/hr
Heat Pumpe Water Heater								
Colmac HPA14	1	ea	55,000.00	55,000	12,000.00	12,000	$67,000	Vendor Quote/Estimate: 3 man crew/5 days/$100/hr
Piping and Fittings								
Piping Associated w/ Install	1	ea	744.75	745	944.60	945	$1,689	Means 2017
Electrical Service Upgrades								
Service Upgrade From Panel	2	ea	1,000.00	2,000	3,000.00	6,000	$8,000	Electrical Engineer Estimate
Subtotal							$82,407	
Subtotal Incremental Cost (EEM-Base)							$82,407	
GC Mark-ups on Hard Costs								
General Conditions / General Requirements						5.00%	$4,120	
General Contractor's OH&P						25.00%	$20,602	
General Contractor's Fee and Ins						5.00%	$5,356	
TOTAL DIRECT COST							$112,486	
Project Management Fee						3.0%	$3,375	
Architect / Engineering Design						10.0%	$11,249	
A/E CA						1.0%	$1,125	
Commissioning Agent Fee						2.0%	$1,648	
Permit						1.0%	$1,125	
Estimating contingency						20.0%	$26,201	
Mark-up Subtotal						40%	$44,722	
Total Cost							**$157,209**	

City of Eugene Basis of Cost

Amazon Pool

Heat Pump Water Heater

			Materials		Labor			
			Unit	Amount	Unit	Amount	Total	
Description	Quan.	Units	price	$	price	$	$	Update Notes
Hardcost (including subs OH&P)								
Demolition								
(2) 250 MBH Water Heaters	2	ea		-	268.00	536	$536	Means 2017
Storage Tanks								
Solar Servant Tank (120 Gallon)	2	ea	1,195.00	2,390	800.00	800	$3,190	Online Pricing/Estimate: 1 man crew/1 days/$100/hr
Pumps								
Grundfos HW Pump 230V	1	ea	245.00	245	500.00	500	$745	Online Pricing/Estimate: 1 man crew/0.5 days/$100/hr
Thermostatic Mixing Valve								
1" TMV	1	ea	1,307.00	1,307	250.00	250	$1,557	Online Pricing/Estimate: 1 man crew/0.25 days/$100/hr
Heat Pumpe Water Heater								
Colmac HPA14	1	ea	55,000.00	55,000	12,000.00	12,000	$67,000	Vendor Quote/Estimate: 3 man crew/5 days/$100/hr
Instantaneous Water Heater								
Takagi T-H3-DV-N	4	ea	1,099.00	4,396	400.00	1600	$5,996	Online Pricing/Estimate: 1 man crew/0.5 days/$100/hr
Piping and Fittings								
Piping Associated w/ Install	1	ea	744.75	745	944.60	945	$1,689	Means 2017
Electrical Service Upgrades								
Service Upgrade From Panel	2	ea	4,000.00	8,000		-	$8,000	Electrical Engineer Estimate
Subtotal							$88,713	
Subtotal Incremental Cost (EEM-Base)							$88,713	
GC Mark-ups on Hard Costs								
General Conditions / General Requirements						5.00%	$4,436	
General Contractor's OH&P						25.00%	$22,178	
General Contractor's Fee and Ins						5.00%	$5,766	
TOTAL DIRECT COST							$121,094	
Project Management Fee						3.0%	$3,633	
Architect / Engineering Design						10.0%	$12,109	
A/E CA						1.0%	$1,211	
Commissioning Agent Fee						2.0%	$1,774	
Permit						1.0%	$1,211	
Estimating contingency						20.0%	$28,206	
Mark-up Subtotal						40%	$48,145	
Total Cost							**$169,238**	

5.2.9. High Use Heat Pump Domestic Hot Water System Retrofit

City of Eugene Basis of Cost								
Fire Station 11								
Heat Pump Water Heater								
			Materials		Labor			
			Unit	Amount	Unit	Amount	Total	
Description	Quan.	Units	price	$	price	$	$	Update Notes
Hardcost (including subs OH&P)								
Demolition								
200 MBH Water Heaters	1	ea		-	268.00	268	$268	Means 2017
Storage Tanks								
Solar Servant Tank (120 Gallon)	1	ea	1,195.00	1,195	400.00	400	$1,595	Online Pricing/Estimate: 1 man crew/0.5 days/$100/hr
Pumps								
Grundfos HW Pump 230V	1	ea	245.00	245	400.00	400	$645	Online Pricing/Estimate: 1 man crew/0.5 days/$100/hr
Thermostatic Mixing Valve								
1" TMV	1	ea	1,307.00	1,307	250.00	250	$1,557	Online Pricing/Estimate: 1 man crew/0.25 days/$100/hr
Heat Pumpe Water Heater								
Colmac HPA04	1	ea	16,000.00	16,000	4,800.00	4,800	$20,800	Vendor Quote/Estimate: 2 man crew/3 days/$100/hr
Instantaneous Water Heater								
Takagi T-H3-DV-N	1	ea	1,099.00	1,099	400.00	400	$1,499	Online Pricing/Estimate: 1 man crew/0.5 days/$100/hr
Piping and Fittings								
Piping Associated w/ Install	1	ea	744.75	745	944.60	945	$1,689	Means 2017
Electrical Service Upgrades								
Service Upgrade From Panel	1	ea	4,000.00	4,000		-	$4,000	Electrical Engineer Estimate
Subtotal							$32,053	
Subtotal Incremental Cost (EEM-Base)							$32,053	
GC Mark-ups on Hard Costs								
General Conditions / General Requirements						5.00%	$1,603	
General Contractor's OH&P						25.00%	$8,013	
General Contractor's Fee and Ins						5.00%	$2,083	
TOTAL DIRECT COST							$43,753	
Project Management Fee						3.0%	$1,313	
Architect / Engineering Design						10.0%	$4,375	
A/E CA						1.0%	$438	
Commissioning Agent Fee						2.0%	$641	
Permit						1.0%	$438	
Estimating contingency						20.0%	$10,191	
Mark-up Subtotal						40%	$17,395	
Total Cost							**$61,148**	

5.2.10. Low Use Heat Pump Domestic Hot Water System Retrofit

City of Eugene Basis of Cost								
City of Eugene								
Low Use Heat Pump DHW System Retrofit								
			Materials		Labor			
			Unit	Amount	Unit	Amount	Total	
Description	Quan.	Units	price	$	price	$	$	Update Notes
Hardcost (including subs OH&P)								
Heat Pump Water Heater								
Sanden CO2 Water Heater	1	ea	3,495.00	3,495	409.59	410	$3,905	Online Pricing/Means 2017
Pumps								
Grundfos HW Pump 230V	1	ea	245.00	245	107.00	107	$352	Online Pricing/Means 2017
Thermostatic Mixing Valve								
3/4" TMV	1	ea	1,287.00	1,287	23.00	23	$1,310	Online Pricing/Means 2017
Piping and Fittings								
3/4" Copper Pipe	20	ea	7.50	150	4.82	96	$246	Means 2017
Pipe Fittings and Appurtanances	200%		200%	300	200%	193	$493	Means 2017
Pipe Insulation	20	ea	1.72	34	2.65	53	$87	Means 2017
Controls								
Connection to Existing Controls	5	points	300.00	1,500	500.00	2500	$4,000	Analyst Estimate
Electrical Service Upgrades								
Service Upgrade From Panel	1	ea	4,000.00	4,000		-	$4,000	Electrical Engineer Estimate
Subtotal Incremental Cost (EEM-Base)							$14,393	
GC Mark-ups on Hard Costs								
General Conditions / General Requirements						3.00%	$432	
General Contractor's OH&P						25.00%	$3,598	
General Contractor's Fee and Ins						5.00%	$921	
TOTAL DIRECT COST							$19,344	
Project Management Fee						3.0%	$580	
Architect / Engineering Design						5.0%	$967	
A/E CA						1.0%	$193	
Commissioning Agent Fee						5.0%	$720	
Permit						1.0%	$193	
Estimating contingency						5.0%	$1,100	
Mark-up Subtotal						19%	$3,754	
Total Cost							**$23,098**	

5.2.11. Solar Thermal Domestic Hot Water System Installation

City of Eugene Basis of Cost								
City of Eugene Fire Stations								
Solar Thermal DHW								
			Materials		Labor			
			Unit	Amount	Unit	Amount	Total	
Description	Quan.	Units	price	$	price	$	$	Update Notes
Hardcost (including subs OH&P)								
Storage Tanks								
Solar Servant Tank (120 Gallon)	1	ea	1,195.00	1,195	400.00	400	$1,595	Online Pricing/Estimate: 1 man crew/0.5 days/$100/hr
Pumps								
Grundfos HW Pump 230V	1	ea	245.00	245	400.00	400	$645	Online Pricing/Estimate: 1 man crew/0.5 days/$100/hr
Thermostatic Mixing Valve								
1" TMV	1	ea	1,307.00	1,307	23.00	23	$1,330	Online Pricing/Means 2017
Collectors								
Sunearth 4' x 10' Glazed Collector	3	ea	2,099.94	6,300	3,200.00	3,200	$9,500	Online Pricing/Estimate: 2 man crew/2 days/$100/hr
Piping and Fittings								
Piping Associated w/ Install	1	ea	1,879.05	1,879	1,553.90	1554	$3,433	Means 2017
Controls								
Connection to Existing Controls	5	points	300.00	1,500	500.00	2500	$4,000	Analyst Estimate
Subtotal Incremental Cost (EEM-Base)							$20,503	
GC Mark-ups on Hard Costs								
General Conditions / General Requirements						5.00%	$1,025	
General Contractor's OH&P						25.00%	$5,126	
General Contractor's Fee and Ins						5.00%	$1,333	
TOTAL DIRECT COST							$27,986	
Project Management Fee						3.0%	$840	
Architect / Engineering Design						5.0%	$1,399	
A/E CA						1.0%	$280	
Commissioning Agent Fee						2.0%	$410	
Permit						1.0%	$280	
Estimating contingency						5.0%	$1,560	
Mark-up Subtotal						17%	$4,768	
Total Cost							**$32,755**	

5.2.12. Solar Thermal Domestic Hot Water System Retrofit

City of Eugene Basis of Cost								
Fire Station 1								
Solar Thermal DHW Retrofit								
			Materials		Labor			
			Unit	Amount	Unit	Amount	Total	
Description	Quan.	Units	price	$	price	$	$	Update Notes
Hardcost (including subs OH&P)								
Storage Tanks								
Solar Servant Tank (120 Gallon)	1	ea	1,195.00	1,195	400.00	400	$1,595	Online Pricing/Estimate: 1 man crew/0.5
Pumps								
Grundfos HW Pump 230V	1	ea	245.00	245	400.00	400	$645	Online Pricing/Estimate: 1 man crew/0.5
Thermostatic Mixing Valve								
1" TMV	1	ea	1,307.00	1,307	23	23	$1,330	Online Pricing/Means 2017
Piping and Fittings								
3/4" Copper Pipe	20	ea	7.50	150	4.82	96	$246	Means 2017
Pipe Fittings and Appurtanances	200%		200%	300	200%	193	$493	Means 2017
Pipe Insulation	20	ea	1.72	34	2.65	53	$87	Means 2017
Controls								
Connection to Existing Controls	2	points	300.00	600	500.00	1,000	$1,600	Analyst Estimate
Subtotal Incremental Cost (EEM-Base)							$5,997	
GC Mark-ups on Hard Costs								
General Conditions / General Requirements						5.00%	$300	
General Contractor's OH&P						25.00%	$1,499	
General Contractor's Fee and Ins						5.00%	$390	
TOTAL DIRECT COST							$8,185	
Project Management Fee						3.0%	$246	
Architect / Engineering Design						10.0%	$819	
A/E CA						1.0%	$82	
Commissioning Agent Fee						2.0%	$120	
Permit						1.0%	$82	
Estimating contingency						20.0%	$1,907	
Mark-up Subtotal						40%	$3,254	
Total Cost							**$11,440**	

5.3. Basis of Design Drawings

5.3.1. Boiler Replacement for Swimming Pool Heating Water Systems – Echo Hollow – Demo

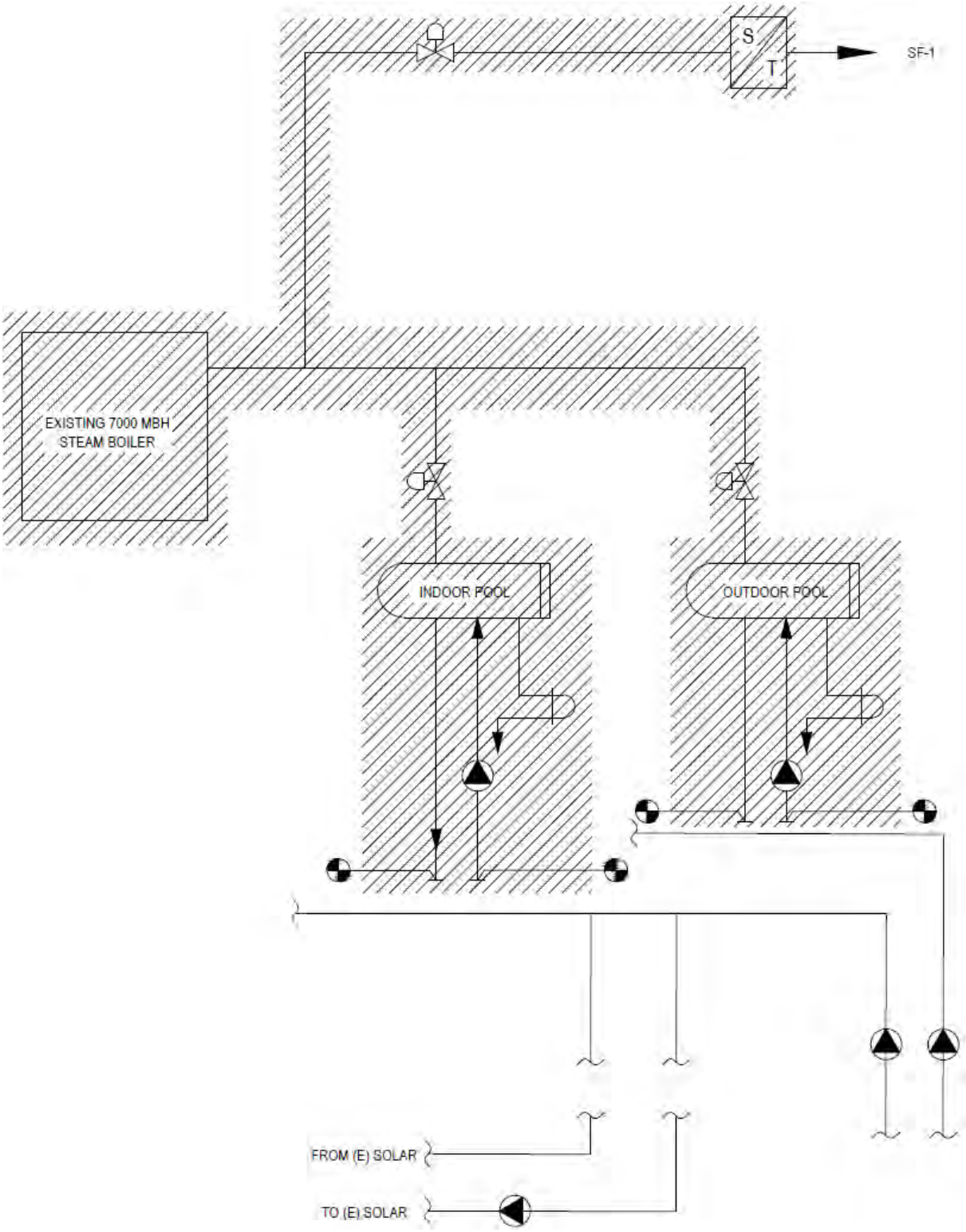

5.3.2. Boiler Replacement for Swimming Pool Heating Water Systems – Echo Hollow – New

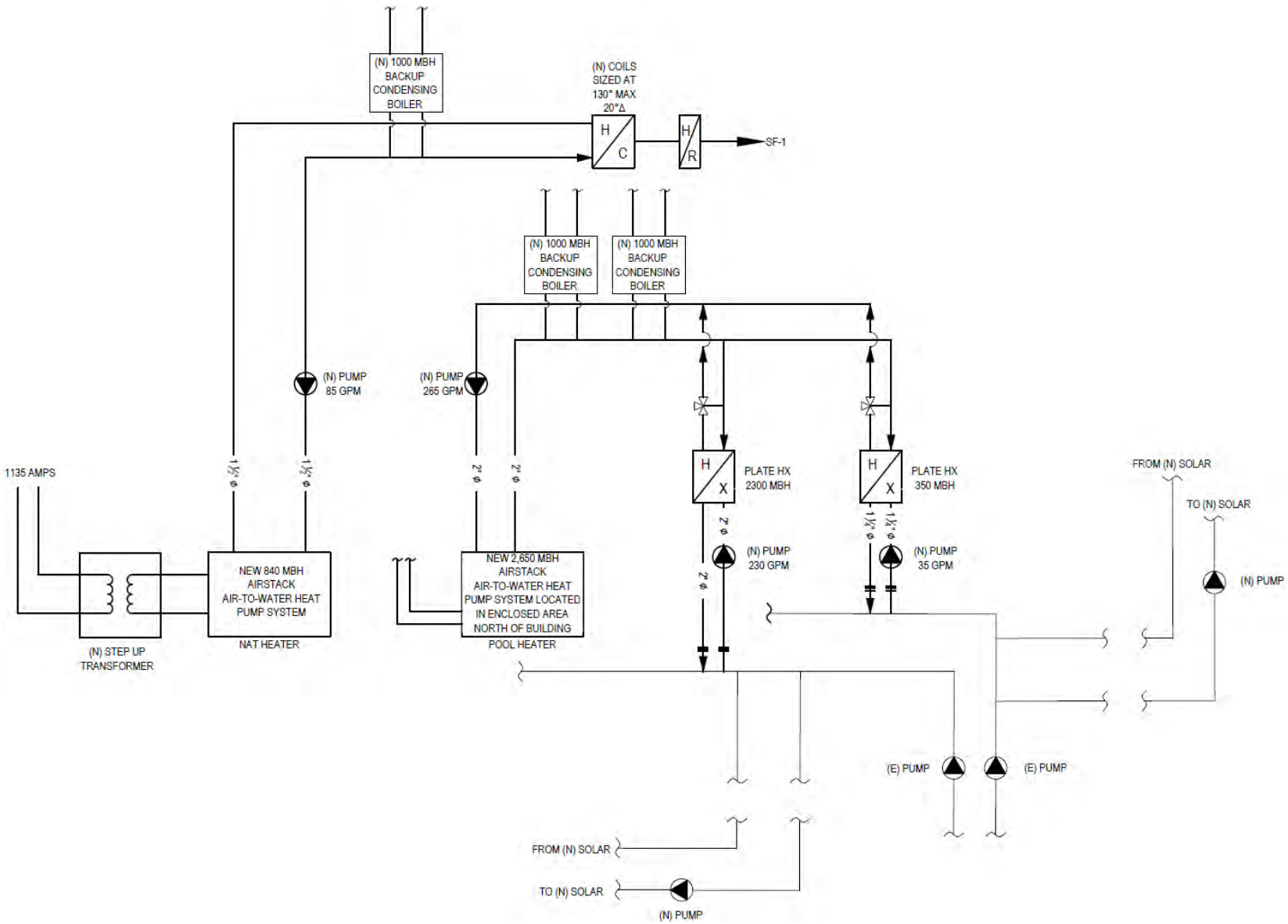

5.3.3. Boiler Replacement for Swimming Pool Heating Water Systems – Sheldon Pool – Demo

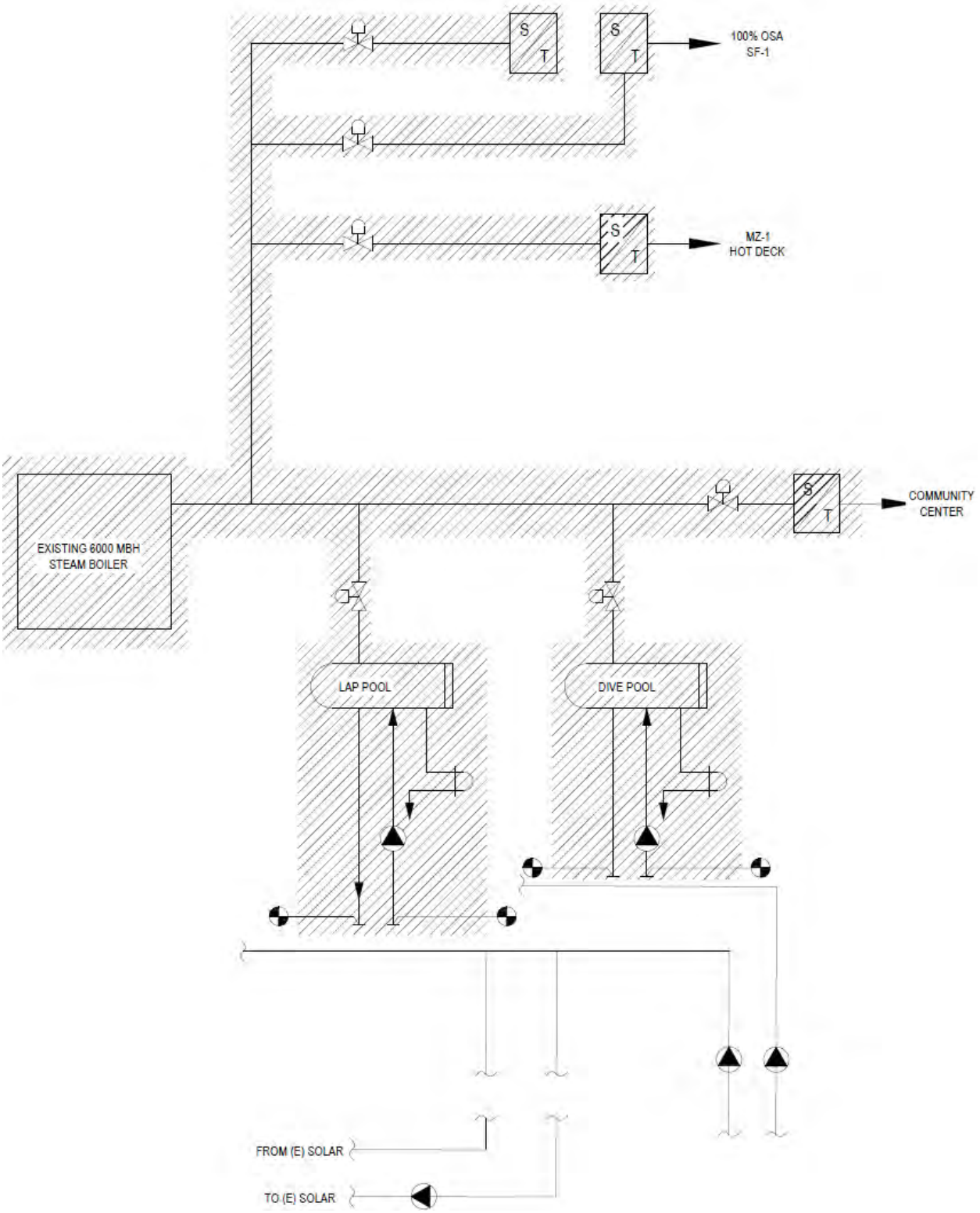

5.3.4. Boiler Replacement for Swimming Pool Heating Water Systems – Sheldon Pool – New

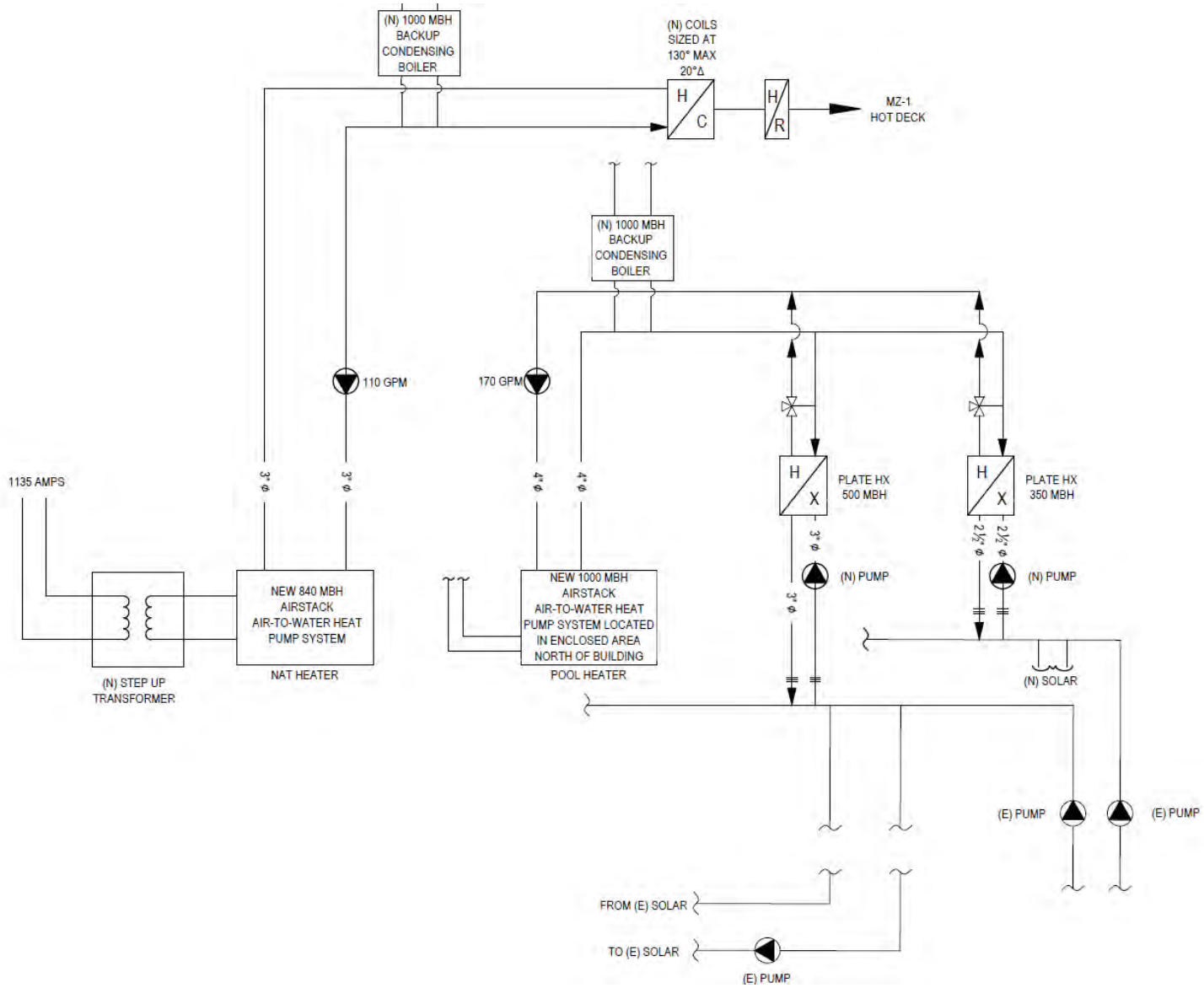

5.3.5. Boiler Replacement for Swimming Pool Heating Water Systems – Amazon Pool – New

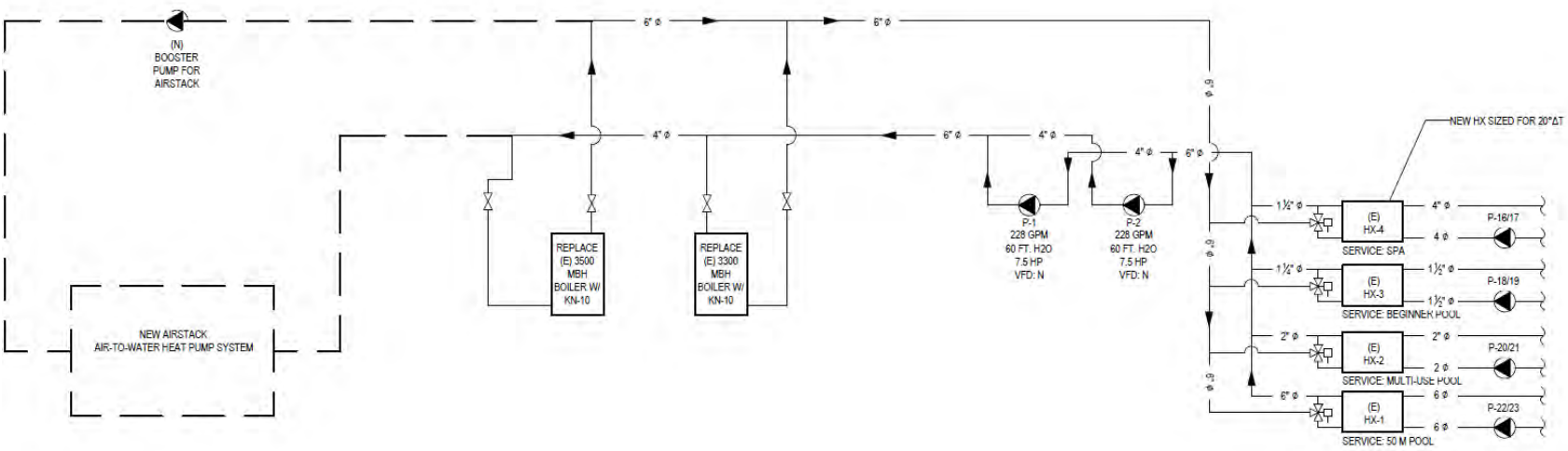

5.3.6. Boiler Replacement for Building Heating Water Systems – Eugene Airport

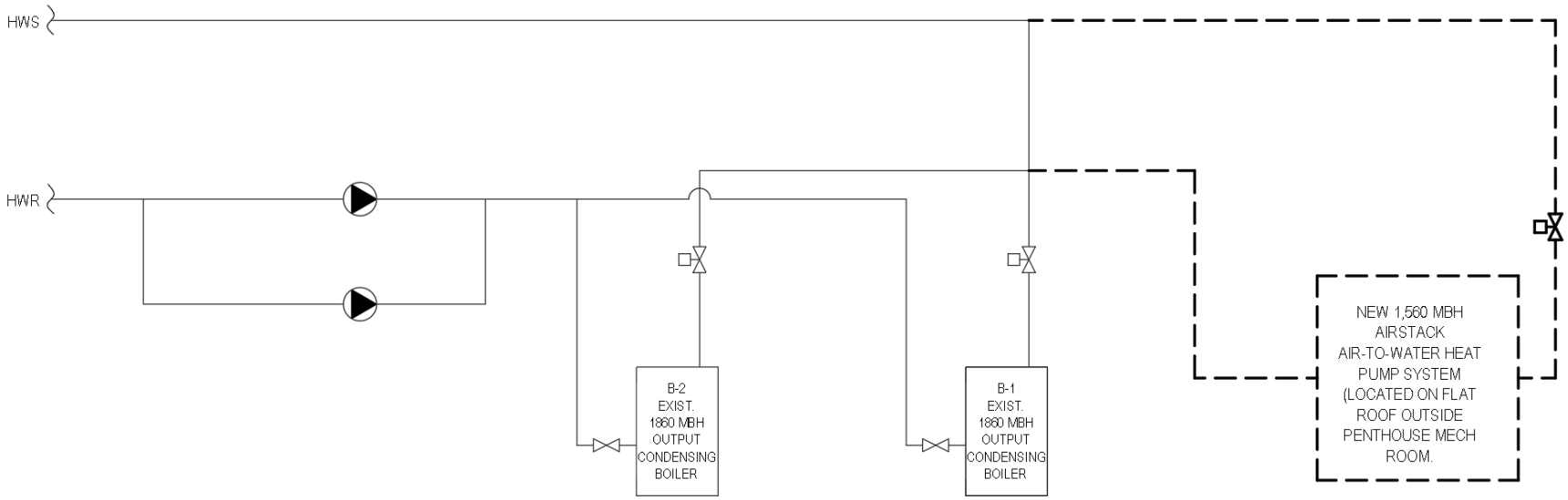

5.3.7. Variable Refrigerant Flow System Retrofit – Sheldon Community Center – Systems West Design

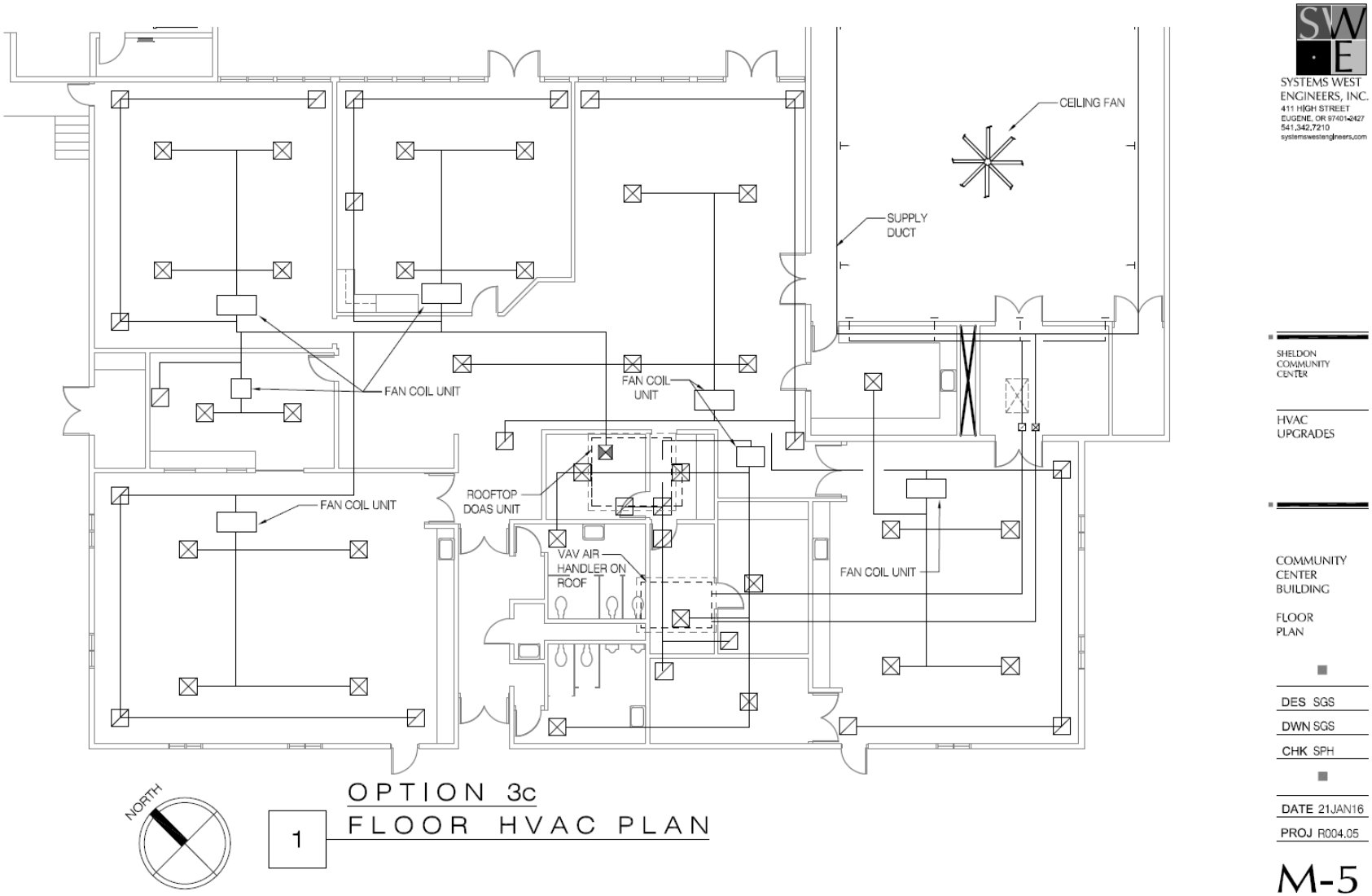

5.3.8. Swimming Pool Heat Pump Domestic Hot Water System Retrofit – Sheldon and Echo Hollow Pool

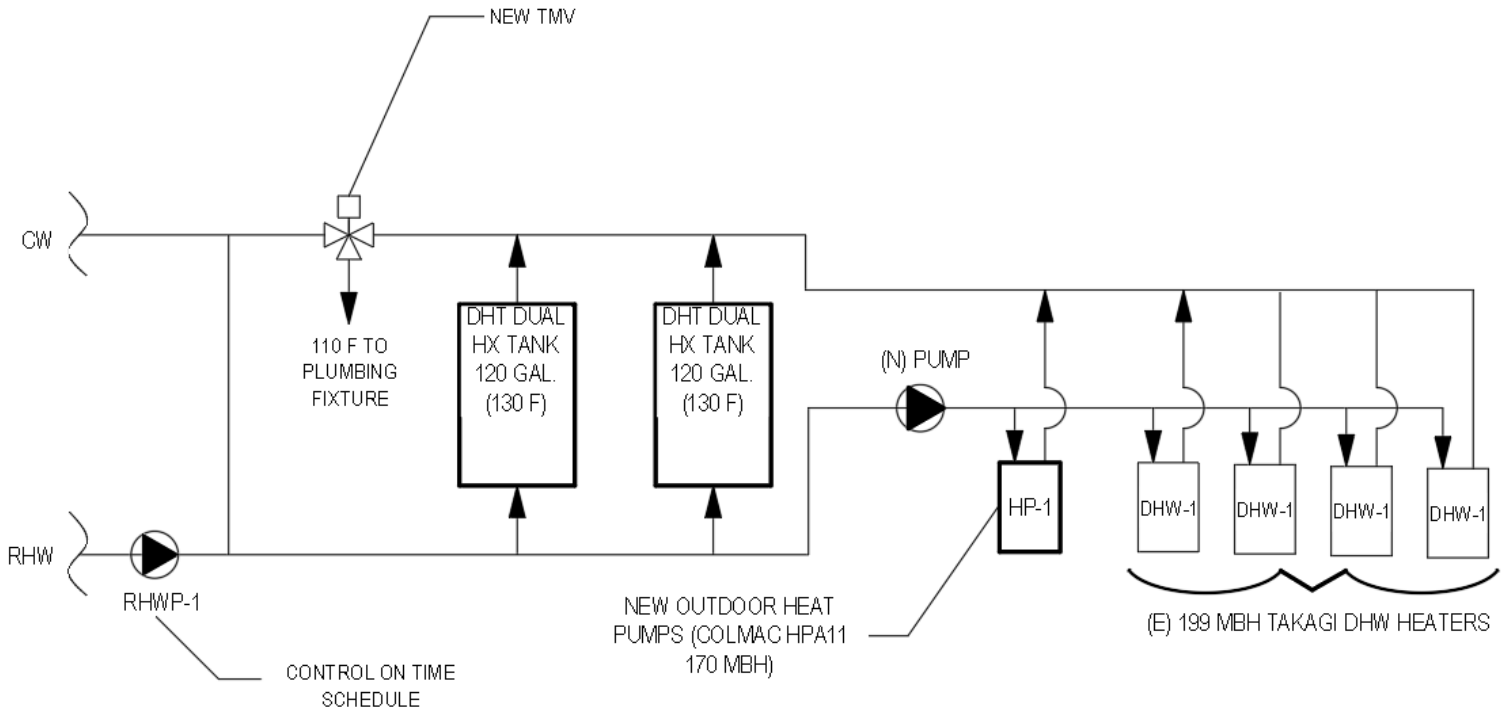

5.3.9. Swimming Pool Heat Pump Domestic Hot Water System Retrofit – Amazon Pool

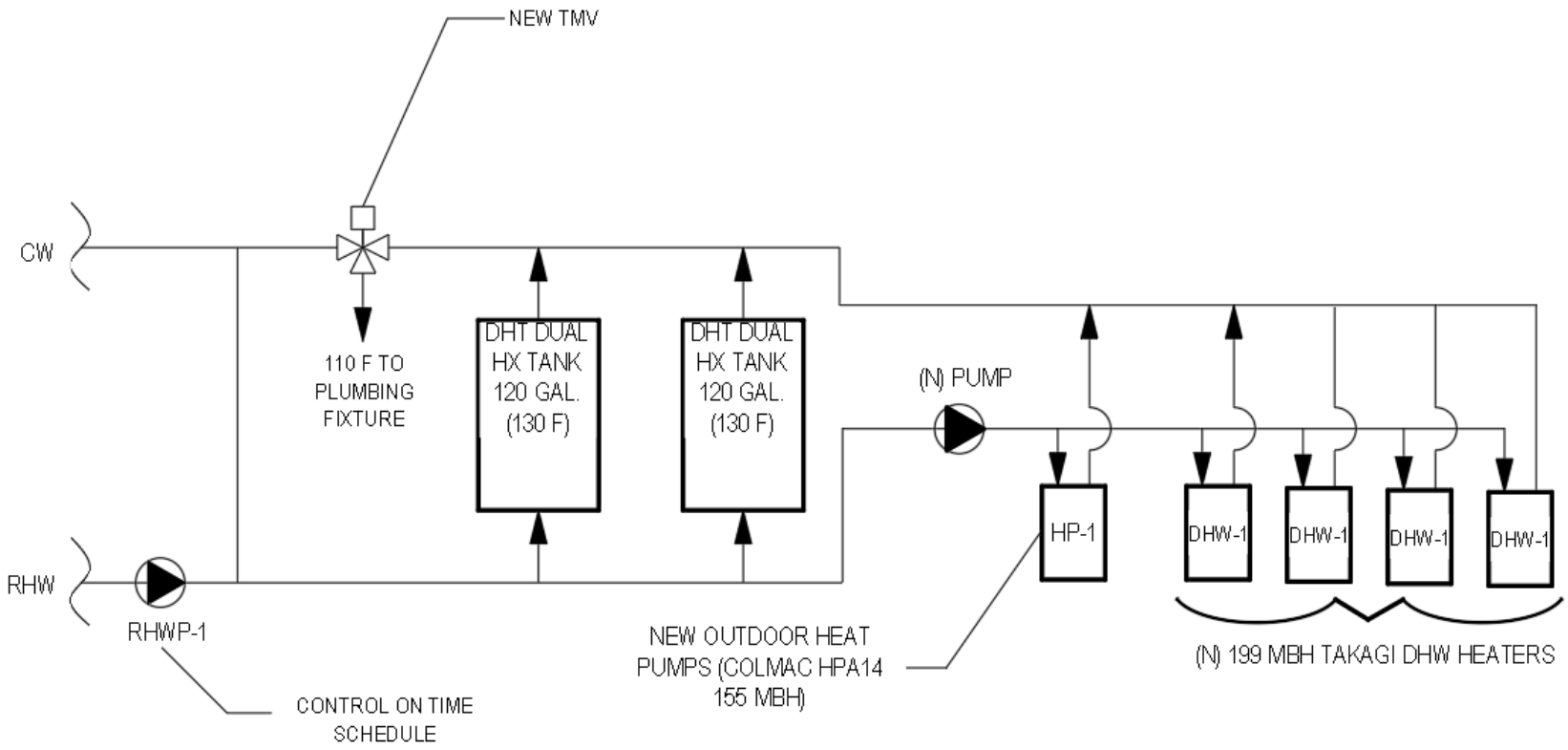

5.3.10. High Use Heat Pump Domestic Hot Water System Retrofit

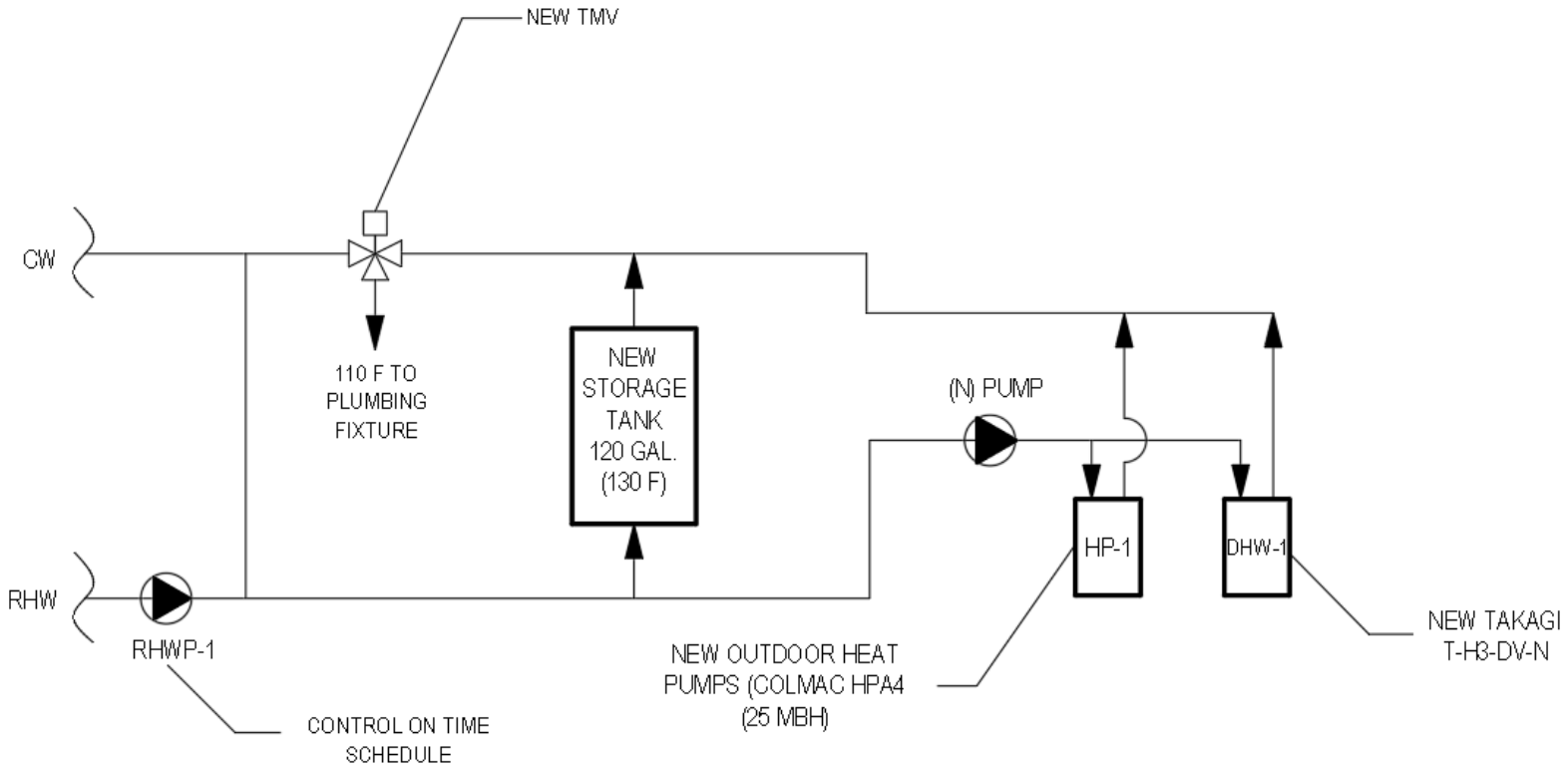

5.3.11. Solar Thermal Domestic Hot Water System Installation

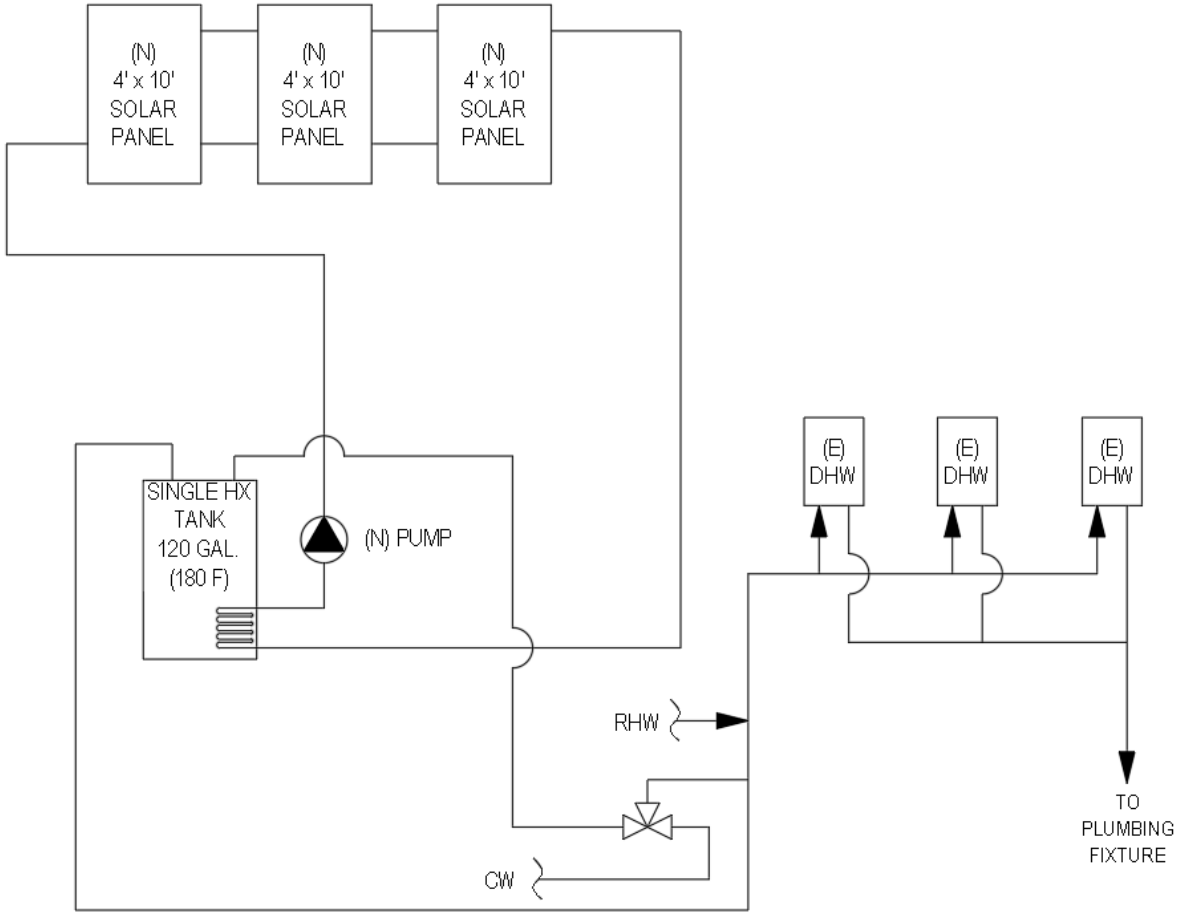

5.3.12. Solar Thermal Domestic Hot Water System Retrofit

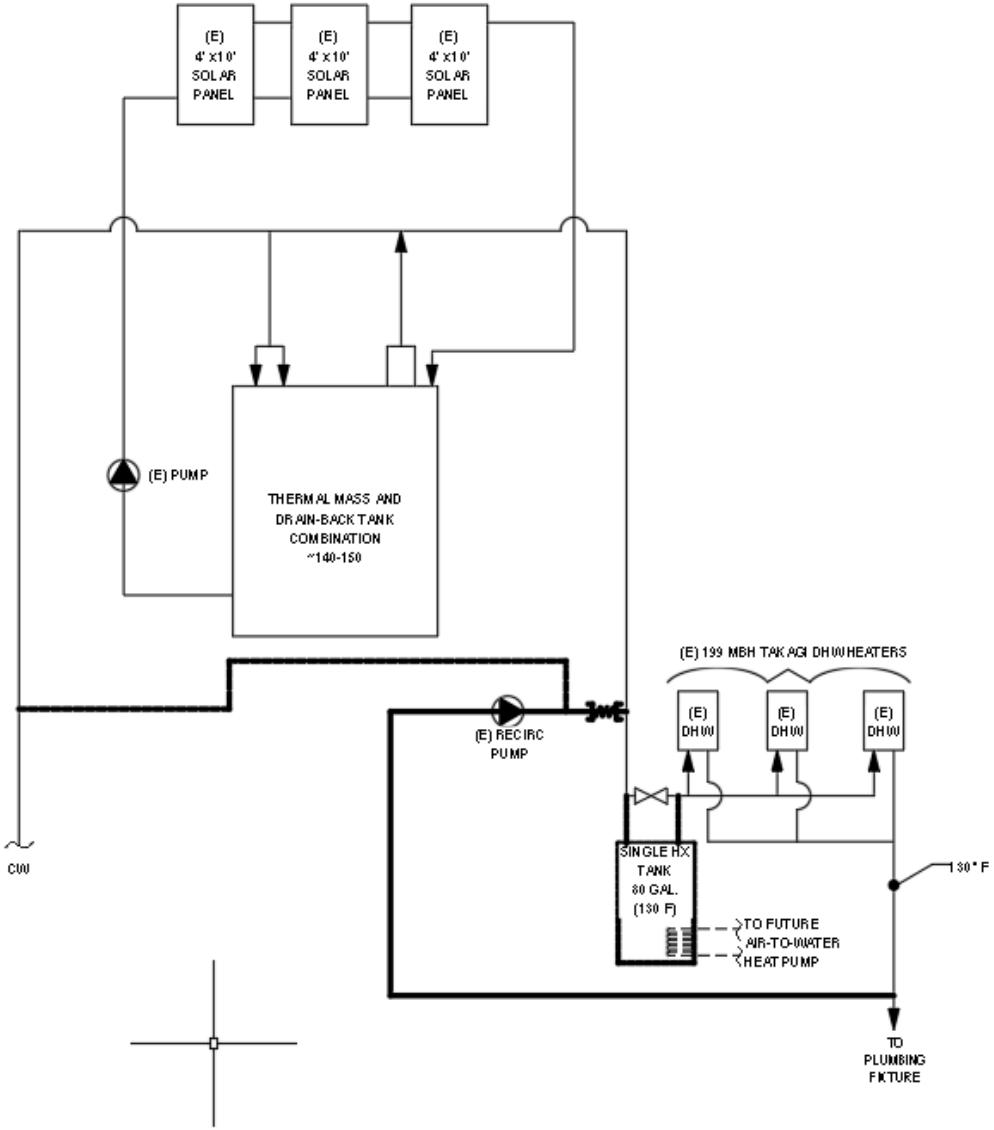

5.4. LCCA Spreadsheets

This section of the appendix provides details of the LCCA study done for each of the GHG reduction strategies. Inflation and discount rates are identical for each of the strategies. The LCCA study period use spans from 2018 to 2040.Replacement costs and salvage value is not accounted for in the scope of this LCCA. Carbon offset costs were calculated at $20/MT in 2018 and inflated by 2.0% per year every year after. The offset costs were reduced based on the continuing implementation of GHG reduction measures until the GHG emissions are equal to the 2020 goal.

5.4.1. Least First Cost LCCA Detailed Information

Table 35 – Summary LCCA Inputs – Least First Cost

Cost Inflation	1.7%
Elec Inflation	2.0%
NG Inflation	0.5%
Carbon Offset Inflation	2.0%
Discount Rate	3.0%
Total NPV	($5,811,751)

Table 36 –LCCA Table – Least First Cost Option

	Implementation Cost								Annual Savings		Rolling Annual Savings		Inflated Costs						
Year	ReCx	Pool DHW Retrofit	Gas Pack Retrofit	Pool Boiler Retrofit	Retro Solar Thermal Hot Water (Pool)	Staff	Offset	Total, First Cost	Electric Savings	NG Savings	Electric Savings	NG Savings	First Cost	ReCx	Carbon Offset Cost	Staff	Electric Savings	NG Savings	Total Cost
2018	$51,042				$3,588	$0	0	$3,588	$3,592	$8,641	$3,592	$8,641	-$3,649	-$51,910	$0	$0	$3,664	$8,684	$8,699
2019	$51,042					$0	0	$0	$3,592	$4,119	$7,184	$12,760	$0	-$52,792	$0	$0	$7,474	$12,888	$20,362
2020	$51,042	$157,209				$0	$17,405	$157,209	-$9,938	$17,972	-$2,754	$30,732	-$165,364	-$53,690	-$18,470	$0	-$2,923	$31,195	-$155,561
2021	$51,042	$157,209				$0	$15,734	$157,209	-$4,956	$12,871	-$7,711	$43,603	-$168,175	-$54,603	-$17,031	$0	-$8,346	$44,482	-$149,070
2022	$51,042	$169,238	$113,860			$0	$13,855	$283,098	-$6,583	$14,537	-$14,294	$58,141	-$307,994	-$55,531	-$15,297	$0	-$15,782	$59,609	-$279,463
2023	$51,042				$320,425	$0	$13,061	$320,425	$3,592	$5,777	-$10,702	$63,918	-$354,529	-$56,475	-$14,709	$0	-$12,052	$65,860	-$315,431
2024	$51,042		$113,413			$0	$12,129	$113,413	$792	$6,986	-$9,911	$70,904	-$127,617	-$57,435	-$13,932	$0	-$11,384	$73,423	-$79,510
2025	$51,042			$1,581,479		$100,000	$8,255	$1,581,479	-$22,115	$30,440	-$32,026	$101,344	-$1,809,802	-$58,411	-$9,673	-$114,437	-$37,523	$105,469	-$1,865,965
2026	$51,042		$260,719			$100,000	$6,473	$260,719	-$5,824	$13,760	-$37,849	$115,104	-$303,432	-$59,404	-$7,736	-$116,383	-$45,234	$120,388	-$352,397
2027	$51,042			$1,206,377		$100,000	$3,980	$1,206,377	-$11,367	$19,436	-$49,217	$134,539	-$1,427,883	-$60,414	-$4,851	-$118,361	-$59,995	$141,420	-$1,469,671
2028	$51,042		$351,360			$100,000	$3,700	$351,360	$1,622	$2,017	-$47,595	$136,556	-$422,944	-$61,441	-$4,601	-$120,373	-$59,178	$144,258	-$462,839
2029	$51,042			$1,522,600		$100,000	$0	$1,522,600	-$16,383	$24,571	-$63,978	$161,127	-$1,863,963	-$62,486	$0	-$122,420	-$81,139	$171,065	-$1,896,457
2030	$25,521					$100,000	$0	$0	$0	$0	-$63,978	$161,127	$0	-$31,774	$0	-$124,501	-$82,762	$171,921	-$35,342
2031	$25,521					$100,000	$0	$0	$0	$0	-$63,978	$161,127	$0	-$32,314	$0	-$126,617	-$84,417	$172,780	-$38,255
2032	$25,521					$100,000	$0	$0	$0	$0	-$63,978	$161,127	$0	-$32,863	$0	-$128,770	-$86,106	$173,644	-$41,232
2033	$25,521					$100,000	$0	$0	$0	$0	-$63,978	$161,127	$0	-$33,422	$0	-$130,959	-$87,828	$174,512	-$44,274
2034	$25,521					$100,000	$0	$0	$0	$0	-$63,978	$161,127	$0	-$33,990	$0	-$133,185	-$89,585	$175,385	-$47,385
2035	$25,521					$100,000	$0	$0	$0	$0	-$63,978	$161,127	$0	-$34,568	$0	-$135,449	-$91,376	$176,262	-$50,564
2036	$25,521					$100,000	$0	$0	$0	$0	-$63,978	$161,127	$0	-$35,156	$0	-$137,752	-$93,204	$177,143	-$53,813
2037	$25,521					$100,000	$0	$0	$0	$0	-$63,978	$161,127	$0	-$35,753	$0	-$140,094	-$95,068	$178,029	-$57,133
2038	$25,521					$100,000	$0	$0	$0	$0	-$63,978	$161,127	$0	-$36,361	$0	-$142,475	-$96,969	$178,919	-$60,526
2039	$25,521					$100,000	$0	$0	$0	$0	-$63,978	$161,127	$0	-$36,979	$0	-$144,898	-$98,909	$179,814	-$63,992
2040	$25,521					$100,000	$0	$0	$0	$0	-$63,978	$161,127	$0	-$37,608	$0	-$147,361	-$100,887	$180,713	-$67,535

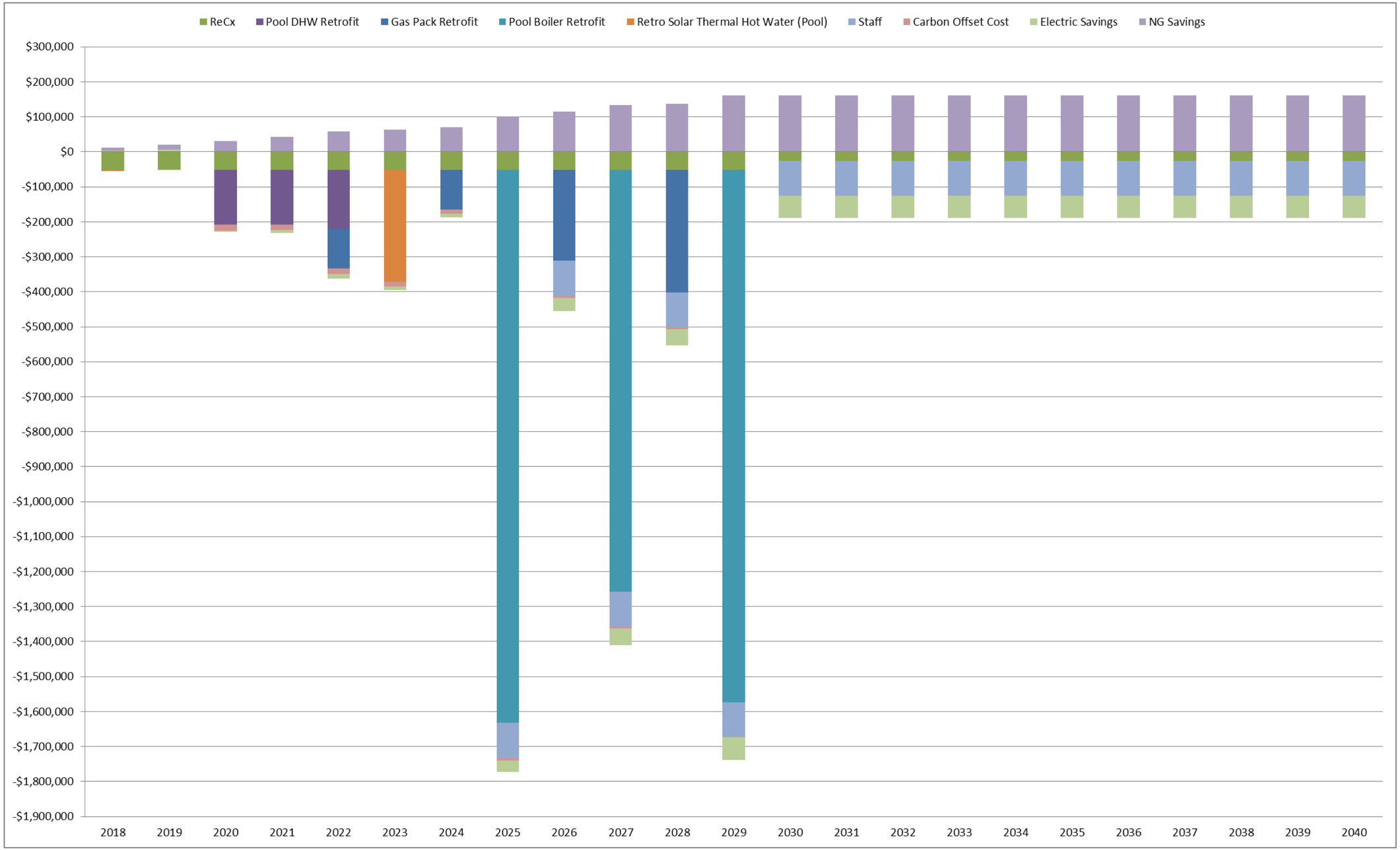

LCCA Timeline – Least First Cost Option

5.4.2. Least Number of Projects LCCA Detailed Information

Table 37– – *Summary LCCA Inputs – Least Number of Projects*

Cost Inflation	1.7%
Elec Inflation	2.0%
NG Inflation	0.5%
Carbon Offset Inflation	2.0%
Discount Rate	3.0%
Total NPV	(10,778,385)

Table 38 – LCCA Table – Least Number of Projects Option

	Implementation Cost							Annual Savings		Rolling Annual Savings		Inflated Costs						
Year	ReCx	Heat Pump Water Heating (Pools)	Boiler Retrofit	New Solar Thermal Hot Water (Pool)	Staff	Offsets	Total, First Cost	Electric Savings	NG Savings	Electric Savings	NG Savings	First Cost	ReCx	Carbon Offset Cost	Staff	Electric Savings	NG Savings	Total Cost
2018	$51,042				$0	0	$0	$3,592	$4,119	$3,592	$4,119	$0	-$51,910	$0	$0	$3,664	$4,139	$7,803
2019	$51,042				$0	0	$0	$3,592	$4,119	$7,184	$8,238	$0	-$52,792	$0	$0	$7,474	$8,320	$15,794
2020	$51,042		$1,479,400		$100,000	$18,324	$1,479,400	-$11,252	$15,640	-$4,069	$23,878	-$1,556,139	-$53,690	-$19,446	-$105,187	-$4,318	$24,238	-$1,660,852
2021	$51,042		$1,380,587		$100,000	$15,844	$1,380,587	-$11,260	$19,326	-$15,329	$43,204	-$1,476,889	-$54,603	-$17,150	-$106,975	-$16,593	$44,074	-$1,573,532
2022	$51,042			$406,162	$100,000	$13,093	$406,162	$3,592	$20,535	-$11,737	$63,739	-$441,880	-$55,531	-$14,456	-$108,794	-$12,959	$65,348	-$512,739
2023	$51,042		$1,536,596		$100,000	$11,815	$1,536,596	-$1,900	$9,742	-$13,637	$73,481	-$1,700,143	-$56,475	-$13,305	-$110,643	-$15,357	$75,713	-$1,763,736
2024	$51,042		$690,766		$100,000	$10,582	$690,766	-$5,344	$9,591	-$18,981	$83,071	-$777,280	-$57,435	-$12,156	-$112,524	-$21,803	$86,023	-$837,740
2025	$51,042	$1,581,479			$100,000	$6,709	$1,581,479	-$22,115	$30,440	-$41,096	$113,511	-$1,809,802	-$58,411	-$7,861	-$114,437	-$48,150	$118,132	-$1,862,118
2026	$51,042		$322,623		$100,000	$5,685	$322,623	$82	$7,712	-$41,014	$121,224	-$375,477	-$59,404	-$6,794	-$116,383	-$49,015	$126,789	-$420,880
2027	$51,042	$1,206,377			$100,000	$3,722	$1,206,377	-$14,959	$15,640	-$55,973	$136,864	-$1,427,883	-$60,414	-$4,537	-$118,361	-$68,231	$143,863	-$1,475,149
2028	$51,042		$343,187		$100,000	$2,786	$343,187	-$3,034	$7,226	-$59,007	$144,090	-$413,105	-$61,441	-$3,464	-$120,373	-$73,368	$152,216	-$458,096
2029	$51,042	$1,522,600			$100,000	$0	$1,522,600	-$19,975	$24,571	-$78,982	$168,661	-$1,863,963	-$62,486	$0	-$122,420	-$100,169	$179,063	-$1,907,488
2030	$25,521				$100,000	$0	$0			-$78,982	$168,661	$0	-$31,774	$0	-$124,501	-$102,172	$179,959	-$46,714
2031	$25,521				$100,000	$0	$0			-$78,982	$168,661	$0	-$32,314	$0	-$126,617	-$104,215	$180,858	-$49,974
2032	$25,521				$100,000	$0	$0			-$78,982	$168,661	$0	-$32,863	$0	-$128,770	-$106,300	$181,763	-$53,307
2033	$25,521				$100,000	$0	$0			-$78,982	$168,661	$0	-$33,422	$0	-$130,959	-$108,426	$182,672	-$56,713
2034	$25,521				$100,000	$0	$0			-$78,982	$168,661	$0	-$33,990	$0	-$133,185	-$110,594	$183,585	-$60,195
2035	$25,521				$100,000	$0	$0			-$78,982	$168,661	$0	-$34,568	$0	-$135,449	-$112,806	$184,503	-$63,753
2036	$25,521				$100,000	$0	$0			-$78,982	$168,661	$0	-$35,156	$0	-$137,752	-$115,062	$185,425	-$67,389
2037	$25,521				$100,000	$0	$0			-$78,982	$168,661	$0	-$35,753	$0	-$140,094	-$117,363	$186,352	-$71,105
2038	$25,521				$100,000	$0	$0			-$78,982	$168,661	$0	-$36,361	$0	-$142,475	-$119,711	$187,284	-$74,902
2039	$25,521				$100,000	$0	$0			-$78,982	$168,661	$0	-$36,979	$0	-$144,898	-$122,105	$188,221	-$78,782
2040	$25,521				$100,000	$0	$0			-$78,982	$168,661	$0	-$37,608	$0	-$147,361	-$124,547	$189,162	-$82,746

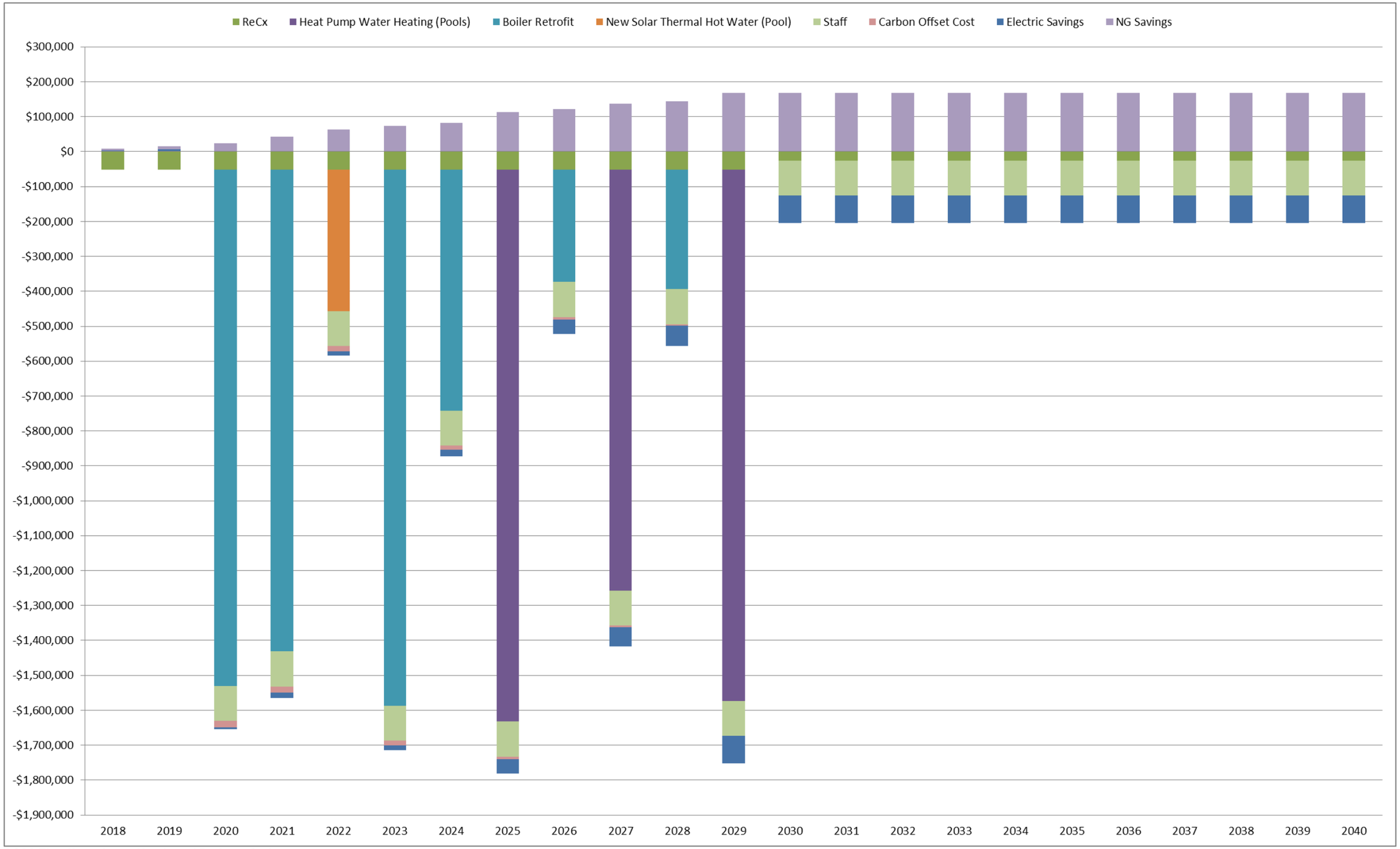

LCCA Timeline – Least Number of Projects Option

5.4.3. Least First Cost LCCA Detailed Information

Table 39 – Summary LCCA Inputs – Lowest Risk

Cost Inflation	1.7%
Elec Inflation	2.0%
NG Inflation	0.5%
Carbon Offset Inflation	2.0%
Discount Rate	3.0%
Total NPV	(5,796,051)

Table 40 – LCCA Table – Least Risk Option

	Implementation Cost													Annual Savings		Rolling Annual Savings		Inflated Costs						
Year	ReCx	VRF Retrofit	Furnace Retrofit	Gas Pack Retrofit	New Solar Thermal DHW	Retro Solar Thermal DHW	New Solar Thermal Hot Water (Pool)	Retro Solar Thermal Hot Water (Pool)	Pool DHW Retrofit	Staff	Offsets	Total Capital	Total ReCx	Electric Savings	NG Savings	Electric Savings	NG Savings	First Cost	ReCx	Carbon Offset Cost	Staff	Electric Savings	NG Savings	Total Cost
2018	$51,042							$3,276		0	0	$3,276	$51,042	$0	$8,641	$0	$8,641	-$3,332	-$51,910	$0	$0	$0	$8,684	$5,353
2019	$51,042									0	0	$0	$51,042	$0	$4,119	$0	$12,760	$0	-$52,792	$0	$0	$0	$12,888	$12,888
2020	$51,042		$242,386		$89,791				$157,209	$5,000	$15,914	$489,386	$51,042	-$21,357	$30,255	-$21,357	$43,015	-$514,771	-$53,690	-$16,888	-$5,259	-$22,664	$43,664	-$515,920
2021	$51,042		$188,407		$23,832				$157,209	$10,000	$13,819	$369,448	$51,042	-$11,957	$16,468	-$33,314	$59,483	-$395,218	-$54,603	-$14,958	-$10,698	-$36,060	$60,682	-$396,252
2022	$51,042		$175,565			$31,569	$104,776		$169,238	$15,000	$10,801	$481,148	$51,042	-$10,206	$23,320	-$43,520	$82,803	-$523,460	-$55,531	-$11,926	-$16,319	-$48,049	$84,894	-$514,860
2023	$51,042		$160,122	$386,378						$15,000	$8,179	$546,500	$51,042	-$12,369	$20,461	-$55,889	$103,265	-$604,666	-$56,475	-$9,211	-$16,597	-$62,940	$106,402	-$587,012
2024	$51,042		$159,869	$452,977						$15,000	$6,651	$612,846	$51,042	-$3,850	$11,739	-$59,739	$115,003	-$689,601	-$57,435	-$7,639	-$16,879	-$68,621	$119,089	-$663,651
2025	$51,042	$1,059,339								$15,000	$5,555	$1,059,339	$51,042	-$4,274	$8,495	-$64,013	$123,498	-$1,212,279	-$58,411	-$6,509	-$17,166	-$75,002	$128,526	-$1,182,430
2026	$51,042		$363,365					$320,425		$15,000	$4,299	$683,790	$51,042	-$18	$9,473	-$64,031	$132,971	-$795,814	-$59,404	-$5,137	-$17,457	-$76,523	$139,076	-$755,855
2027	$51,042	$917,617								$15,000	$2,396	$917,617	$51,042	-$6,761	$14,720	-$70,792	$147,691	-$1,086,103	-$60,414	-$2,921	-$17,754	-$86,295	$155,244	-$1,037,830
2028	$51,042		$273,396				$301,386			$15,000	$0	$574,782	$51,042	-$4,343	$20,474	-$75,135	$168,165	-$691,885	-$61,441	$0	-$18,056	-$93,421	$177,649	-$625,713
2029	$51,042	$1,222,752								$15,000	$0	$1,222,752	$51,042	-$1,457	$5,611	-$76,592	$173,776	-$1,496,890	-$62,486	$0	-$18,363	-$97,137	$184,494	-$1,427,896
2030	$25,521									$15,000		$0	$25,521			-$76,592	$173,776	$0	-$31,774	$0	-$18,675	-$99,080	$185,416	$67,661
2031	$25,521									$15,000		$0	$25,521			-$76,592	$173,776	$0	-$32,314	$0	-$18,993	-$101,062	$186,343	$66,289
2032	$25,521									$15,000		$0	$25,521			-$76,592	$173,776	$0	-$32,863	$0	-$19,315	-$103,083	$187,275	$64,877
2033	$25,521									$15,000		$0	$25,521			-$76,592	$173,776	$0	-$33,422	$0	-$19,644	-$105,145	$188,212	$63,423
2034	$25,521									$15,000		$0	$25,521			-$76,592	$173,776	$0	-$33,990	$0	-$19,978	-$107,247	$189,153	$61,927
2035	$25,521									$15,000		$0	$25,521			-$76,592	$173,776	$0	-$34,568	$0	-$20,317	-$109,392	$190,098	$60,389
2036	$25,521									$15,000		$0	$25,521			-$76,592	$173,776	$0	-$35,156	$0	-$20,663	-$111,580	$191,049	$58,806
2037	$25,521									$15,000		$0	$25,521			-$76,592	$173,776	$0	-$35,753	$0	-$21,014	-$113,812	$192,004	$57,178
2038	$25,521									$15,000		$0	$25,521			-$76,592	$173,776	$0	-$36,361	$0	-$21,371	-$116,088	$192,964	$55,505
2039	$25,521									$15,000		$0	$25,521			-$76,592	$173,776	$0	-$36,979	$0	-$21,735	-$118,410	$193,929	$53,785
2040	$25,521									$15,000		$0	$25,521			-$76,592	$173,776	$0	-$37,608	$0	-$22,104	-$120,778	$194,899	$52,016

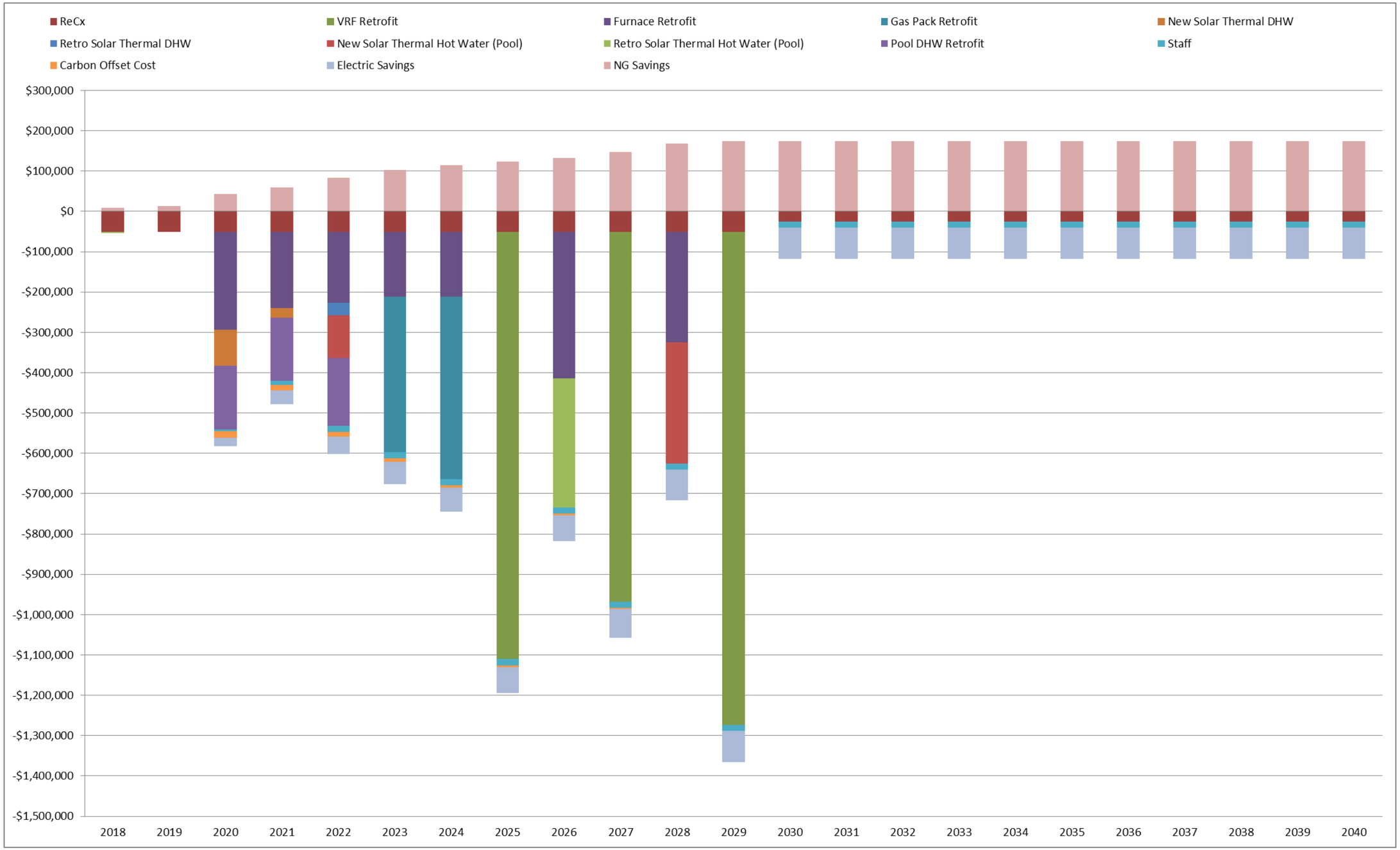

LCCA Timeline – Least Risk Option

5.5. McKinsey GHG Abatement Cost Curve

The McKinsey Company is a global management consulting firm that continuously researches the topic of GHG abatement. They have created a GHG abatement cost curve which is widely used in published GHG abatement studies. The most recent version of the study is the McKinsey's Global GHG Abatement Cost Curve v3.0; BAU building on International Energy Agency World Energy Outlook 2010. This cost curve presents an estimate of the maximum potential of technical GHG abatement measures below $1000 per tCO_2e. This curve was used to help guide the development of Strategy 4 to be consistent with projected abatement costs developed by the McKinsey Company. For more information on this curve and other studies done by the McKinsey Company their website it www.McKinsey.com.

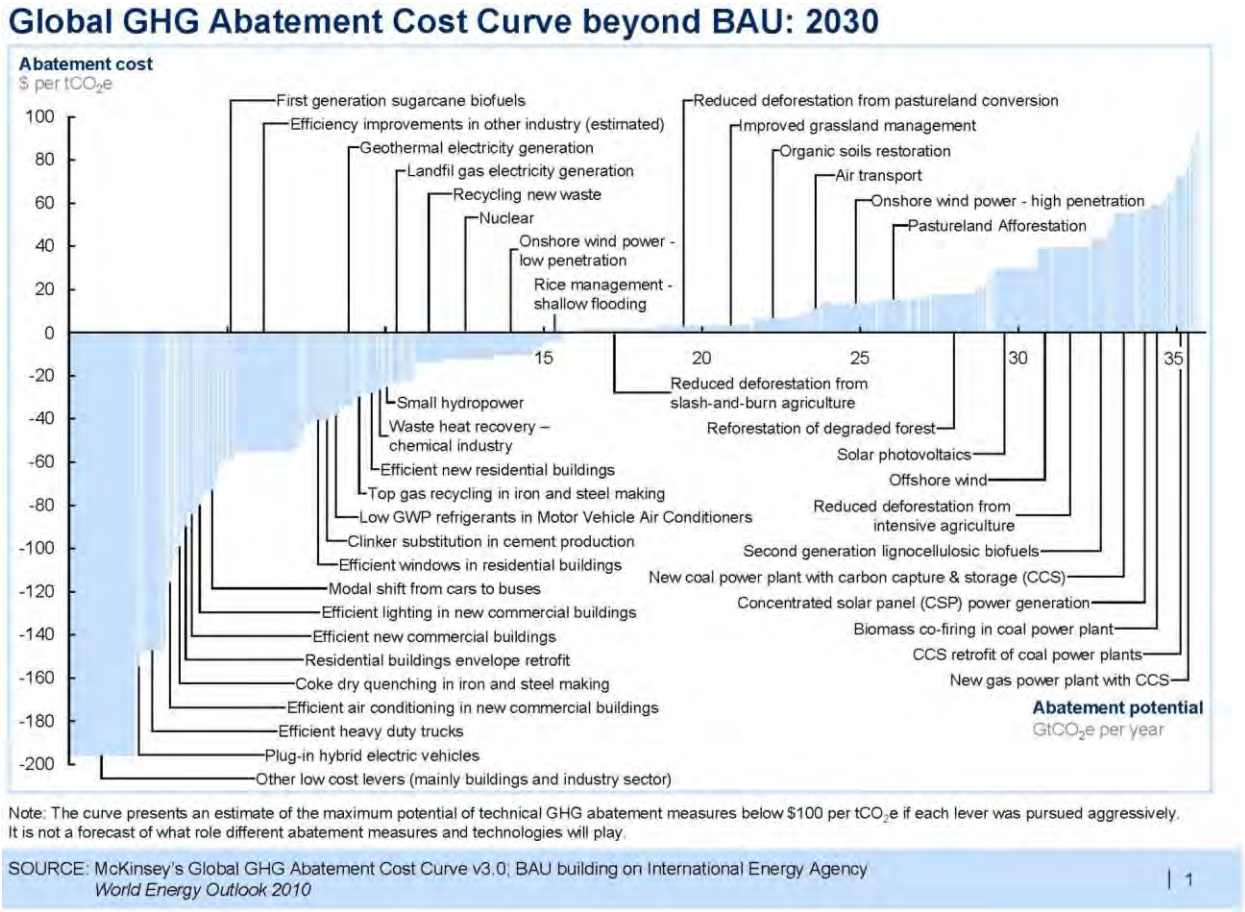

Note: The curve presents an estimate of the maximum potential of technical GHG abatement measures below $100 per tCO_2e if each lever was pursued aggressively. It is not a forecast of what role different abatement measures and technologies will play.

SOURCE: McKinsey's Global GHG Abatement Cost Curve v3.0; BAU building on International Energy Agency *World Energy Outlook 2010* | 1

https://www.google.com/url?sa=t&rct=j&q=&esrc=s&source=web&cd=4&cad=rja&uact=8&ved=0ahUKEwju3rLx7dnWAhVBFmMKHR_5BdQQFgg5MAM&url=http%3A%2F%2Fwww.worldmaterialsforum.com%2Ffiles%2Fdownloads%2F3_3_Global_GHG_Abatement_Cost_Curve.pdf&usg=AOvVaw3z-T2wGbSKEqmtFtBArM0B

5.6. Product Cut Sheets

Airstack® By MULTISTACK®

Air Source Heat Pump Product Data Catalog

For Modules: ARP010X, ARP015X, ARP020X, ARP030X, ARP060X

c ETL LISTED us

Table of Contents

Features.....4
Model Number Nomenclature 5-6
General Data and Sound Data Table.....7
Piping Diagram 8
Electrical Data 9
Pump Selection Charts 10
Chiller Diagrams..... 11-18
VME Option 19-20
Mechanical Specifications 21-22

Product Features

Highly Efficient

- Energy efficiency is a prime consideration in designing any HVAC system. Airstack heat pumps are among the most efficient in the industry.
- Digital controls and multiple modules and compressors means Airstack heat pumps closely match actual operating loads to achieve best efficiency and significantly reduce energy consumption and operating costs compared to single-compressor units
- COP levels of up to 4.1
- Airstack heat pumps can help owners achieve USGBC LEED points and energy credits
- Many utility companies offer significant rebates for installing energy efficient products like Airstack heat pumps

Highly Dependable

- Multiple modules offer multiple independent refrigeration circuits for redundancy and reliability
- Comprehensive computer monitoring and control of operations for efficient operation
- Automatic lead/lag compressor rotation (not applicable with VME options)

Design Flexibility

- Purchase and install only the modules and capacity needed
- Expandable—add modules and capacity as needed
- Wide range of module combinations available including:
  - Free cooling modules
  - Tanks
  - Glycol shot feeders
  - Pumping packages
  - Super quiet modules

Wide Range of Options

- Expansion tanks
- Air separator
- Copper/copper coils
- Stainless steel construction
- Specialty coatings
- Special valves
- Controls interface options
- Simultaneous heating and cooling with VME options

Easy To Install

- Compact modules fit through standard doors and into elevators
- Modules connect easily and quickly to provide 10 to 600 tons capacity
- All refrigeration systems are factory charged and run tested

Easy To Operate

- Plain English LCD display
- Simple keypad operating controls

Easy to Service

- Individual modules can be isolated and serviced with other modules operating
- Proprietary service training not required
- Most components are standard, off-the-shelf parts

Left: ARP Single Module; Above: ARP020X with VME option

Disclaimer: The nomenclature on this page covers multiple modules, not every option is available for the Air Source Heat Pump.
Please contact Multistack for product specific nomenclature.

Air Source Heat Pump Modular

ARP 030 X N 1 1 H 1 R S _ A A A S N -410A

- Refrigerant[10]
- Auxilary Condenser[9]
- Fan Configuration[8]
- Source/sink heat exchanger Coating[7]
- Source/sink heat exchanger[6]
- Evaporator[5]
- N/A
- Ambient (L - Low, S - Standard, H - high, C - low & high)
- Application[4]
- Power Connection (1 - Direct Connect, 2 - Multiple Module Connections)
- Voltage[3]
- Frame Designation 1 - 32 x 58, 2 - 36 x 72, 3 - 36 x 84, 4 - 72 x 84, 5 - other)
- No. of Refrigerant Circuits (1 - single , 2 - dual, 4 - four)
- Certification: N - Not certified
- Compressor Type[2]
- Module Nominal Capacity (10-250 tons, needs 3 digits)
- Series[1]

[1] ASP-Air Stack Packaged (standard air cooled chiller), ARP-Airstack Reversing heat Pump (standard air source heat pump with reversing valve), ASA-Air Stack Auxilliary condenser (air cooled chiller with heat recovery condenser), ARA-Airstack Reversing heat pump Auxilliary condenser (reversing heat pump with heat recovery condenser)
[2] A - Copeland Scroll (ZR), B-Bristol, C - Trane Cornerstone, D-Copeland Digital Scroll, F-Danfoss Turbocor Flooded, H - Hanbell, R - Bitzer Screw, S - Trane Scroll, T - Danfoss Turbocor DX, Z - Copeland scroll (old elec), X - Copeland Scroll (ZP), N-None
[3] A - 208/3/60, L - 230/3/60, H - 460/3/60, C - 575/3/60, D - 200/3/50, E - 400/3/50, F - 380/3/60, S - 220/230/1/60, V - Other
[4] A - Air Cooled, C - Remote Condenser, D - Cond Unit, H-Heat Recovery, R - Heat Pump
[5] A - Brazed SS, B - Brazed SMO, C- S&T copper, D - S&T cu-Ni, O - remote by others,R-Remote by MS, V - Other, N-None
[6] A - Cu tube Al fin, B - Cu tube Cu fin, C- Microchannel, V - Other
[7] A - None, B - Bronzeglow, H - Heresite, E - Electrofin, S - Standard, V - Other
[8] E-ECM Fan, H - High static, L -Single Fan, S - standard, V -Other
[9] A - brazed SS, B - brazed SMO, E - double wall brazed, N - None, V - other
[10] R-410A, R-134a, 407c

Free Cool / Dry Cooler / Remote Condenser Module

FCP 2 H C A A S

- Fan Config (E- ECM fans, H - high static, L - single fan, S - standard, V -other)
- Coil Coating (A - None, B - Bronzeglow, H - Heresite, E - Electrofin, V - Other)
- Coil (A - Cu tube Al fin, B - Cu tube Cu fin, C- Microchannel, V - Other)
- Water Piping (C - Copper, S - Stainless, P - PVC, B - Black iron, V - Other, N - None)
- Voltage (see voltage codes)
- Frame Designation (1 - 32 x 58, 2 - 36 x 72, 3 - 36 x 84, 4 - 72 x 84, 5- other; A - 3V, B - 4V, C - 5V, D - 6V, E - 7V, F - 8V, G-2V)
- Series (FCP - FreeCool Module, DCP - Dry Cooler, RCP - Remote Condenser)

Model Number Nomenclature, Cont'd

Accessory Module

ACP 2 H C 180 G M B S C

- C: Strainer materials of construction[1]
- S: Basket Strainer (S - Single, D - Duplex, L - Lakos, N- None)
- B: Air Separator (Y - Yes, N - None)
- M: Glycol Shot Feeder[2]
- G: Tank Materials (G - galvanized, L - glass lined, C - carbon steel, N - none, P - plastic, S - stainless, V - other)
- 180: Tank Volume (Three digits: 000=None)(Gallons)
- C: Water Piping (C - Copper, S - Stainless, P - PVC, B - Black iron, V - Other)
- H: Voltage (see voltage codes)
- 2: Frame Designation (1 - 32 x 58, 2 - 36 x 72, 3 - 36 x 84, 4 - 72 x 84, 5- other)
- ACP: Series (ACP - Accessory Component Module)

[1] B - Bronze, C - Copper, I - Cast Iron, S - Stainless, N-None, V - Other
[2] K - medium shot feeder & exp tank, L-Large shot feeder & Exp tank, M - Mini shot feeder & Exp tank, T - Exp tank, N - None

VME (Virtual Moveable Endcap) Module

VME 1 H 4 A 1

- 1: Configuration[1]
- A: Valve Location (A - Both Sides, E - Evaporator side only, C - Condenser side only, S - Source, L - load)
- 4: Valve Size (inches)
- H: Voltage (See Voltage Codes)
- 1: VME Version Number (1 or 2)
- VME: Series (VME - Virtual Moveable Endcap)

[1] 1- standard, 2- total access, 3 - evap ext headers, 4 - cond ext headers, 5 - both ext headers, A - 31.5 x 24, B - 36 x 24, C - 72 x 24, V - others

Disclaimer: The nomenclature on this page covers multiple modules, not every option is available for the Air Source Heat Pump.
Please contact Multistack for product specific nomenclature.

Amperage Codes/MOP

A	70	M	350
B	80	N	400
C	90	O	450
D	100	P	500
E	110	Q	600
F	125	R	700
G	150	S	800
H	175	T	350/500
I	200	U	400/500
J	225	V	450/500
K	250	W	450/600
L	300	X	500/600

Voltage Codes

A	208/3/60	L	230/3/60
B	24/1/60	M	208/1/60
C	575/3/60	N	575/1/60
D	200/3/50	O	200/1/50
E	380 - 415/3/50	P	380-415/1/50
F	380/3/60	Q	380/1/60
G	120/1/60	R	460/1/60
H	460/3/60	S	220/230/1/60
I		T	
J		U	
K		V	OTHER

GENERAL DATA TABLE OF AIR SOURCE HEAT PUMP STANDARD –X MODULES					
Compressor	**ARP010X**	**ARP015X**	**ARP020X**	**ARP030X**	**ARP060X**
Type	SCROLL	SCROLL	SCROLL	SCROLL	SCROLL
Nominal Capacity (per compressor)	5	7.5	10	15	30
Quantity	2-TANDEM	2-TANDEM	2-TANDEM	2-TANDEM	2-TANDEM
Load Heat Exchanger	**ARP010X**	**ARP015X**	**ARP020X**	**ARP030X**	**ARP060X**
Type	BRAZED PLATE	BRAZED PLATE	BRAZED PLATE	BRAZED PLATE	BRAZED PLATE
Weight	54.4	63.8	83.7	100	214.4
Evap Water Storage (gallons each)	1.08	1.4	2.03	2.54	5.86
Quantity	1	1	1	1	1
Header Storage (gallons per module)	6.4	6.4	18.0	21.0	36.4
Mechanical Module Front Water Volume	7.48	7.8	20.03	23.54	41.9
Mechanical Module Rear Water Volume	1.08	1.4	2.03	2.54	5.86
Refrigerant Type	R-410A	R-410A	R-410A	R-410A	R-410A
Number of Circuits	1	1	1	1	1
Fans	**ARP010X**	**ARP015X**	**ARP020X**	**ARP030X**	**ARP060X**
Motor Type	TEAO*	TEAO*	TEAO*	TEAO*	TEAO*
HP	1	1	2	2	2
Quantity	2	2	2	2	4
Fan Type	Axial	Axial	Axial	Axial	Axial
Fan Material	Composite	Composite	Composite	Composite	Composite
Air Flow (cfm) (per module)	6,600	8,500	16,000	22,000	44,000
Source/Sink Heat Exchanger Coils	**ARP010X**	**ARP015X**	**ARP020X**	**ARP030X**	**ARP060X**
Fin Material	Aluminum	Aluminum	Aluminum	Aluminum	Aluminum
Tube Material	Copper	Copper	Copper	Copper	Copper
Tube Diameter (in.)	3/8	3/8	3/8	3/8	3/8
Number of Rows	6	6	6	6	6
Coil Dimensions (Quantity)	32 x 51 (2)	30 x 49 (2)	30 x 61½ (2)	42 x 73½ (2)	42 x 73½ (4)
Refrigerant Type	R-410A	R-410A	R-410A	R-410A	R-410A
Charge (lbs./circuit)	24	25	45	56	126
Number of Circuits	1	1	1	1	1
Operating Weight (with AL/CU coils)	1475	1475	2025	2480	4875
Shipping Weight (with AL/CU coils)	1400	1400	1850	2205	4525
**TEAO= Totally Enclosed Air Over*					

Multiple module array

Air Source

Heat Pump Water Heaters

COLMAC WATERHEAT

Standard Features

- 140°F - 160°F hot water temperatures to prevent and eradicate Legionella
- Single or multi-pass capability for easy integration into new or existing systems
- Vented double wall, stainless steel, heat exchanger ensuring safe, potable water
- Integrated stainless steel circulator pump
- Industrial electro-mechanical controls

	HPWH Model (60 Hz)	Heating Capacity (MBH)	Cooling Capacity (MBH)	Heating COP	Cooling COP	Combined COP	Hot Water Flow Rate (GPM)	Airflow (CFM)
Propeller Fan	HPA7	110	88	4.5	3.6	8.1	3.1	4000
	HPA9	131	104	4.5	3.6	8.1	3.7	4000
	HPA11	170	137	4.7	3.8	8.5	4.9	4000
	HPA12	209	169	4.9	4.0	8.9	6.0	4000
	HPA15	267	210	4.4	3.5	7.9	7.6	6000
Centrifugal Fan	HPA4	66	53	4.9	4.0	8.9	1.9	1200
	HPA7	110	88	3.7	3.0	6.7	3.1	4000
	HPA9	131	104	3.8	3.1	6.9	3.7	4000
	HPA11	170	137	4.2	3.3	7.5	4.9	4000
	HPA12	209	169	4.4	3.6	8.0	6.0	4000
	HPA15	267	210	3.9	3.1	7.0	7.6	6000

Based on 75°F entering air wet bulb temperature, 70°F entering potable water temperature and 140°F leaving potable water temperature.

COLMAC WATERHEAT
A division of Colmac Industries

401 N. Lincoln • P.O. Box 72 • Colville, WA 99114 • USA
Tel (509) 684-4505 • Fax (509) 684-4500 • Toll Free (800) 926-5622
sales@colmacwaterheat.com • www.colmacwaterheat.com

Air Source

Heat Pump Water Heaters

COLMAC WATERHEAT

Applications

- Hotels
- Apartments
- Offices
- Dormatories
- Laundries
- Hospitals
- Schools
- Industrial Process
- Pools
- Hydronic Heating

Optional Features

- High Temperature Circuit to produce up to 185°F water
- Compressor VFD for additional operational cost savings
- PLC control with BMS communication
- Electronic Expansion Valve (EEV) for improved performance over varying conditions
- Galvanized, aluminum, or stainless steel enclosure
- Copper, Polycoat, or Electroplate evaporator construction
- Coaxial condensers for poor water quality or pool heating applications
- Defrost and freeze protection
- Protective screen and rain hood for outdoor applications

COLMAC WATERHEAT
A division of Colmac Industries

401 N. Lincoln • P.O. Box 72 • Colville, WA 99114 • USA
Tel (509) 684-4505 • Fax (509) 684-4500 • Toll Free (800) 926-5622
sales@colmacwaterheat.com • www.colmacwaterheat.com

Solar Servant™ Storage Tank and Electric Storage Water Heaters for Solar Applications

Available in 80 and 120 Gallon Side Connect and Top Connect Models

6-Year Limited Tank and Parts Warranty*

- Brass drain valve
- Choice of two models…storage tank or single element water heater, both specially equipped for installation with residential direct solar systems
- Patented R-Foam insulation process
- Special threaded stud located near the outlet for attachment of tank sensors
- Temperature and pressure relief valve included
- Collector feed and return fittings located at front of tank for convenient installation
- Isolated tank design for better heat retention
- High efficiency heating element
- Ruudglas® tank lining resists corrosion and prolongs tank life
- Cold water inlet brings cold water to tank bottom to prevent mixing with heated water
- Anode rod equalizes aggressive water action for prolonged tank life
- Cold water inlet, hot water outlet, relief valve and anode rod at top of tank for easy access and fast, economical installation
- Automatic temperature control
- Over temperature protector

*See Residential Warranty Information Brochure for complete warranty information.

Energy Factor and Average Annual Operating Costs based on D.O.E. (Department of Energy) test procedures. D.O.E. national average fuel rate electricity 8.41¢/KWH.

DESCRIPTION				ROUGHING IN DIMENSIONS (SHOWN IN INCHES)			ENERGY INFORMATION
TYPE	GAL. CAP.	MODEL NUMBER	MAXIMUM WATTAGE UPPER	HEIGHT A	DIAMETER B	APPROX. SHIP WT. (LBS.)	APPROX. R-FACTOR
SIDE CONNECT							
TALL	80	RSPER80-1	6000 W	58-3/4	24-1/2	192	R-17.3
	120	RSPER120-1	6000 W	62	28-1/4	336	R-16.7
	80	RSPER80-T	Storage Only	58-3/4	24-1/2	192	R-17.3
	120	RSPER120-T	Storage Only	62	28-1/4	336	R-16.7
TOP CONNECT							
TALL	80	RSTCR80-1	6000 W	58-3/4	24-1/2	192	R-17.3
	120	RSTCR120-1	6000 W	62	28-1/4	336	R-16.7
	80	RSTCR80-T	Storage Only	58-3/4	24-1/2	192	R-17.3
	120	RSTCR120-T	Storage Only	62	28-1/4	336	R-16.7

- All units furnished standard 240 volt AC.
- Units are shipped with a 4500 watt element. **If heating elements of different wattages than those shown are demanded by zone requirements, they must be specifically requested.**
- Solar Servant models meet all current requirements for solar storage tanks.
- The tanks are Ruudglas lined and are designed to operate up to 150 PSI.

SIDE CONNECT
Raised 7" from the bottom, the outlet to the solar collector panel helps prevent scale and sediment from entering and circulating through the solar system.

A special threaded stud is also welded to the tank near the outlet for attachment of tank sensors.

TOP CONNECT
A special threaded stud is also welded to the tank behind the lower cavity opening. Low voltage sensor wire is run from this point inside the jacket and out the top for easy control connection.

These units are designed to meet or exceed ANSI (American National Standards Institute) requirements and have been tested according to D.O.E. test procedures and meet or exceed the energy efficiency requirements of NAECA, ASHRAE standard 90, BOCA Code and all state energy efficiency performance criteria for energy consuming appliances.

Before purchasing this appliance, read important energy cost and efficiency information available from your retailer.

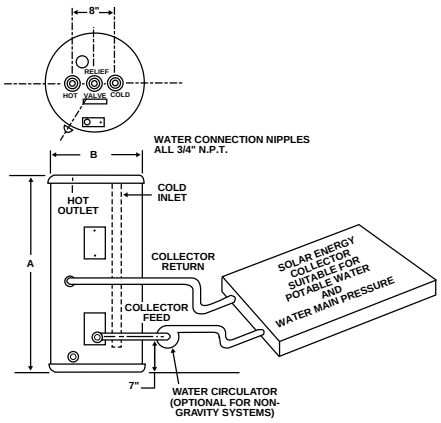

Side Connect

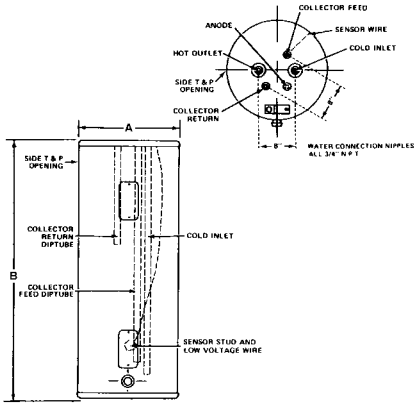

Top Connect

In keeping with its policy of continuous progress and product improvement. Ruud reserves the right to make changes without notice.

Ruud Water Heater Division • Post Office Box 244020 • Montgomery, Alabama 36124-4020

PRINTED IN U.S.A 01-99 WP FORM NO. 101R-1 Rev. 10

TAKAGI

TANKLESS PRODUCT GUIDE

WWW.TAKAGI.COM

Flow Rate Guide

Temperature Rise vs. Gallons per Minute

Temp Rise	KJr2/U Series	K4/U Series	D2/U Series	H3MH Series	H3JH Series	H3SH Series	H3H Series	M50 Series
30°	6.6	8.0	10.0	6.6	6.6	8.0	10.0	14.5
35°	6.6	8.0	9.3	6.4	6.6	8.0	10.0	14.5
40°	5.7	7.8	8.1	5.6	6.6	8.0	9.5	14.5
45°	5.1	6.9	7.2	5.0	6.6	7.6	8.4	13.5
50°	4.6	6.2	6.5	4.5	6.1	6.8	7.6	12.2
55°	4.2	5.7	5.9	4.1	5.5	6.2	6.9	11.1
60°	3.8	5.2	5.4	3.7	5.1	5.7	6.3	10.1
65°	3.5	4.8	5.0	3.4	4.7	5.3	5.8	9.4
70°	3.3	4.4	4.7	3.2	4.3	4.9	5.4	8.7
75°	3.1	4.1	4.3	3.0	4.1	4.6	5.0	8.1
80°	2.9	3.9	4.1	2.8	3.8	4.3	4.7	7.6
85°	2.7	3.7	3.8	2.6	3.6	4.0	4.4	7.2
90°	2.5	3.5	3.6	2.5	3.4	3.8	4.2	6.8
95°	2.4	3.3	3.4	2.3	3.2	3.6	4.0	6.4
100°	2.3	3.1	3.3	2.2	3.0	3.4	3.8	6.1

Flow rate is determined by temperature rise. To determine your temperature rise, subtract the incoming water temperature from the set output temperature. All units are factory set to 120°F or 122°F but can be changed.

Example of Hunter Curves for Sizing Large Applications

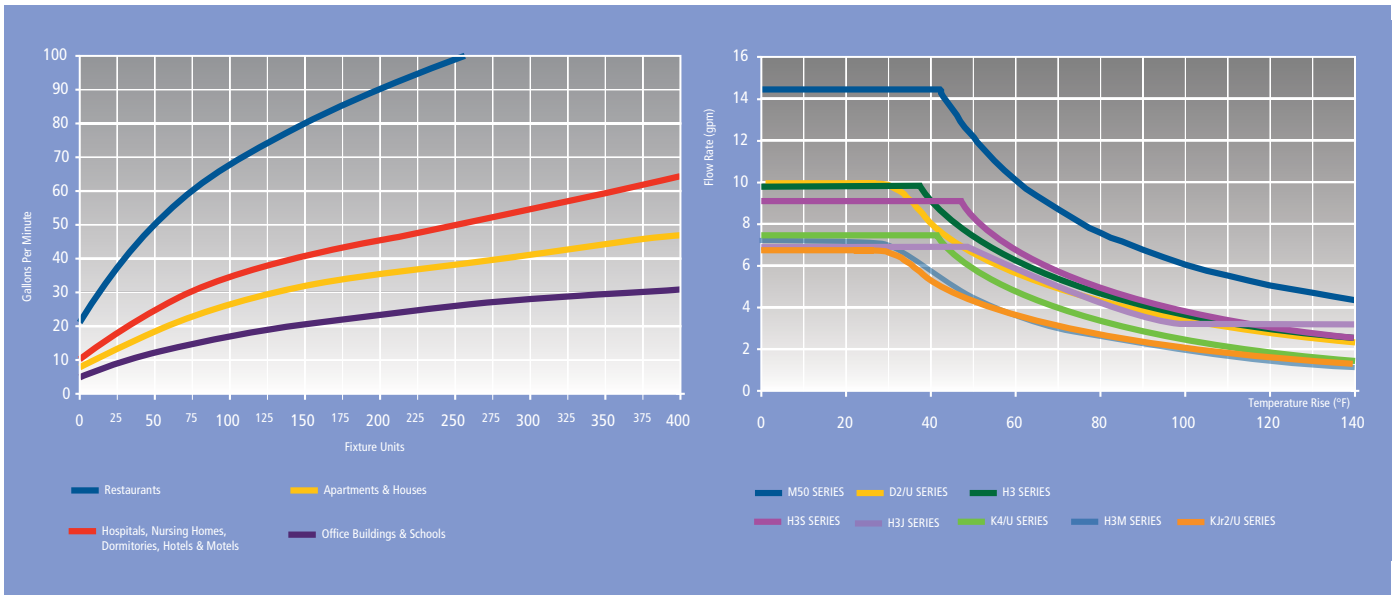

Comparison of Flow Rates vs. Temperature Rise

NON-CONDENSING

KJr2 Series

The KJr2 Series is great for apartments, one bath homes in cold climates, condos and summer cabins. Remote control included as a standard feature.

Dimensions

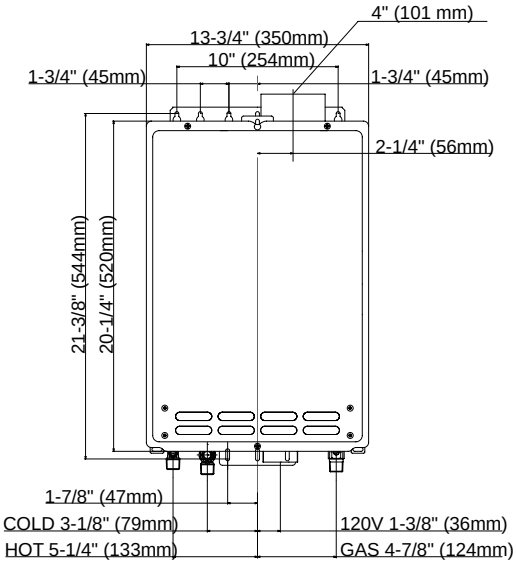

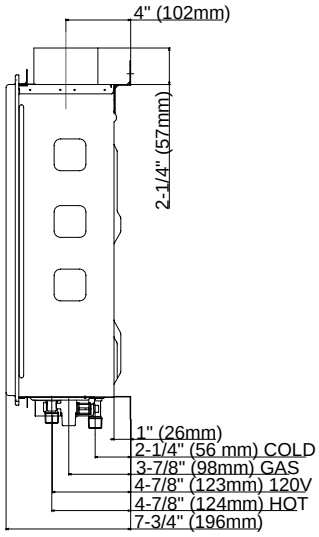

Specifications

Provides a variety of installation options: indoor, outdoor, and direct vent.

Warranty Information**

Residential Use:
15 Years limited heat exchanger,
5 Years limited parts

Low NOx emissions

**Refer to www.takagi.com for further warranty details.

T-KJr2/U-IN includes both a remote control and power cord as standard features.

Installation Type	Indoor, Outdoor, Direct Vent			
Dimension	20-1/4" (H) X 13-3/4" (W) X 7-3/4" (D) , Weight:33 lbs			
Electric	120 V	73 W / 0.73 A (Operation)	6 W / 0.05 A (Standby)	111 W / 0.93 A (Freeze-Protection)
Ignition	Electronic Ignition			
Noise Level	53 dB at Max output			
Fuel		NG	LP	
Gas Consumption	Min. Input	19,500 BTU/h	19,500 BTU/h	
	Max. Input	140,000 BTU/h	140,000 BTU/h	
Energy Factor		0.82	0.82	
Gas Pressure		Min 5.0" W.C.	Min 8.0" W.C.	
		Max 10.5" W.C.	Max 14.0" W.C.	
Flow Rate	6.6 GPM	Values based on factory testing. 0.4 GPM required for continuous fire after initial ignition		
Hot/Cold/Gas Connection	3/4" NPT			
Coil Capacity	≈0.2 Gallons			
Water Pressure	15-150 PSI	Pressure Only Relief Valve Requires (Min 140,000 btu/h, 150 PSI). 40 psi or above recommended for max. flow		
Multiple Unit Installation	Easy-Link System	N/A	N/A	
	Multi-Unit System	N/A	N/A	
KJr2 Temperature Settings	Dipswitches	113°F 122°F (default) 131°F 140°F		
	With 9007666005 remote (max. distance 150' from heater, non-polarized 20 gauge wiring.)			
	99°F to 167°F (16 options), 122°F Default Factory Setting			

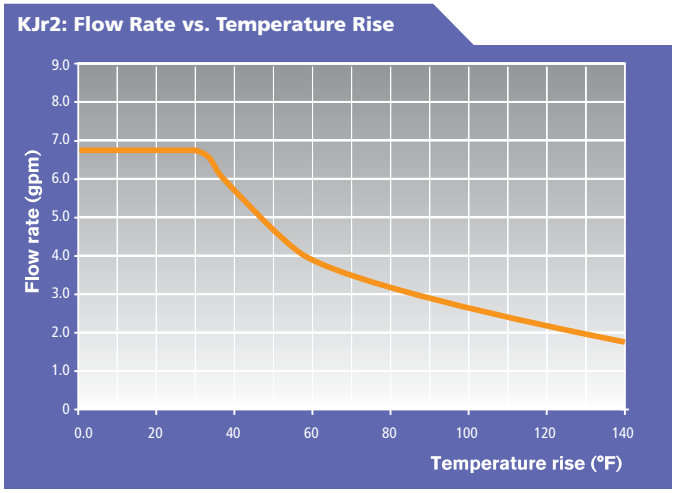

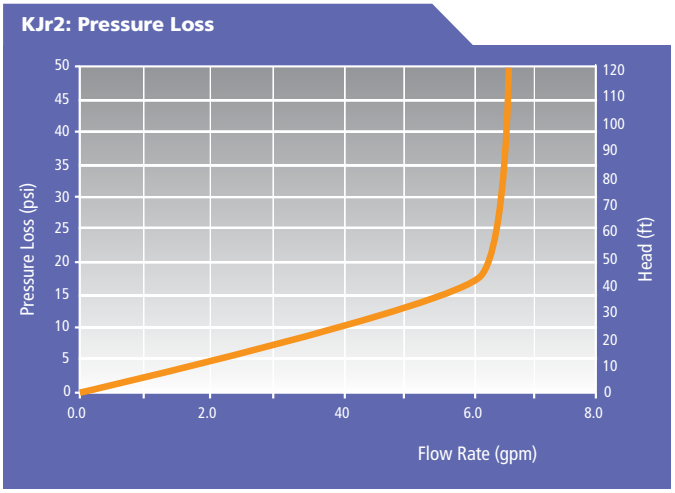

Clearance

Clearances to Combustible and Non-Combustible Surfaces

Indoor Installations

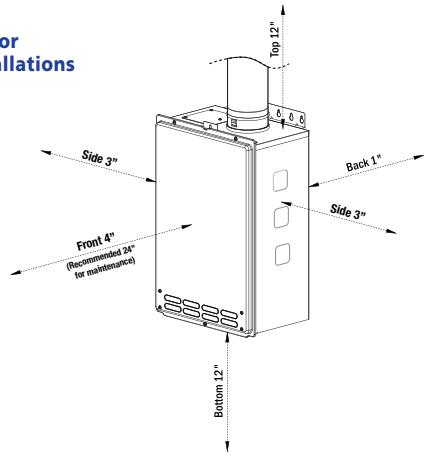

Outdoor Installations

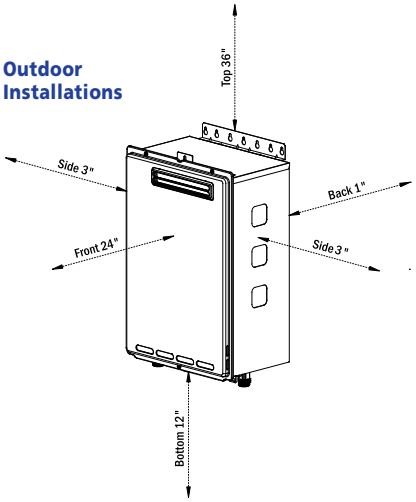

SANDEN

Delivering Excellence

Heat Pump Water Heater

SAN CO_2

Hot water, *naturally.*

SAN CO_2

Hot water, *naturally.*

The Sanden SANCO$_2$ Heat Pump Water Heater is a highly energy efficient alternative to traditional electric or gas water heaters. It absorbs heat from the outside air to heat water – saving energy, saving money and reducing greenhouse gas emissions.

Superior Features

BuildingGreen APPROVED
TOP 10 PRODUCT FOR 2016

ENERGY EFFICIENT

- 4x more efficient than traditional electric water heaters
- Allows use of off-peak power

HIGH PERFORMANCE

- Greater first hour rating than all heat pump water heaters
- Faster recovery after hot water draw

SUPERIOR QUALITY

- Corrosion-resistant stainless steel tank
- 3-year labor, 10-year parts heat pump warranty; 15-year tank warranty

EXTENDED OPERATING RANGE

- Hot water production down to -15°F & below
- 149°F delivered hot water temperature
- No need for a back up electric element in the storage tank

LOW-PROFILE DESIGN

- Whisper-quiet noise level (38dB)
- Slimline heat pump design for a reduced footprint

TANK SIZE OPTIONS

- Two sizes to best fit your hot water needs

43 Gallon Tank
69-Gallon first hour delivery

2 to 4 People

83 Gallon Tank
97-Gallon first hour delivery

5+ People

Minimal Impact on Global Warming

UNIQUE OZONE-FRIENDLY CO_2 REFRIGERANT

Heat pump water heaters commonly use synthetic refrigerants, such as R410A or R134A. Although these refrigerants do not deplete the ozone layer, they can have a significant impact on global warming. The CO_2 refrigerant uniquely used in the SANCO_2 system has an extremely low Global Warming Potential*, and CO_2, a natural refrigerant, does not deplete the ozone layer.

*Global Warming Potential (GWP) is a measure of how much a given mass of greenhouse gas is estimated to contribute to global warming. It is a relative scale which compares the gas in question to that of the same mass of carbon dioxide (whose GWP is equal to 1).

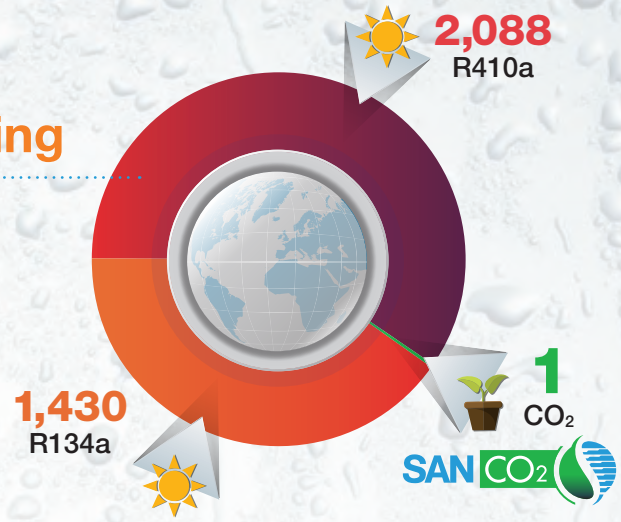

Global Warming Potential*
by refrigerant type per 100 years

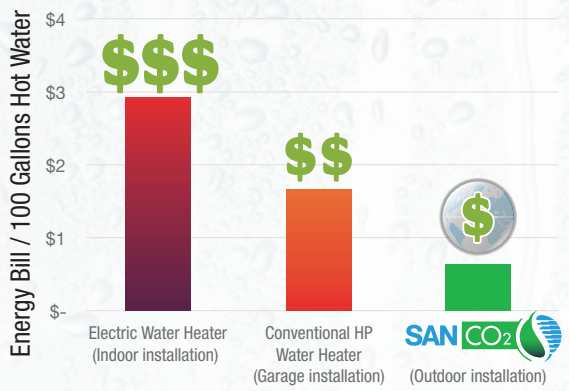

Energy Bill Comparison
with traditional water heaters

Ultra High Efficiency Reduces Energy Bills

USES OVER 70% LESS ELECTRICITY

The SANCO_2 system uses an inverter-type compressor, DC fan motor and pump. Our design minimizes energy consumption, maximizes water-heating capacity, and allows for faster recovery, resulting in significantly lower operating costs than electric-resistance storage water heaters or conventional heat pump water heaters.

- Field testing data in cold climate (Northwest)
- Reference: Washington State University presentation by Ken Eklund available at www.sandenwaterheater.com
- Electricity price: 12.73 cents per kwh (EIA Residential October 2015)

Easy Installation

FLEXIBLE 2-PIECE SYSTEM

The tank is installed indoors and the heat pump outdoors (up to 25 feet away) with only water piping connections required between the two. This flexible SANCO_2 design offers several advantages including maintaining comfortable indoor air temperatures (unlike conventional heat pump water heaters that 'scavenge' heat from the indoor air), along with reducing in-home noise.

SANDEN
Delivering Excellence

SAN CO2 Specifications

All dimensions displayed in inches.

Heat Pump

GUARANTEED 3 YEAR LABOR HEAT PUMP WARRANTY

GUARANTEED 10 YEAR HEAT PUMP WARRANTY

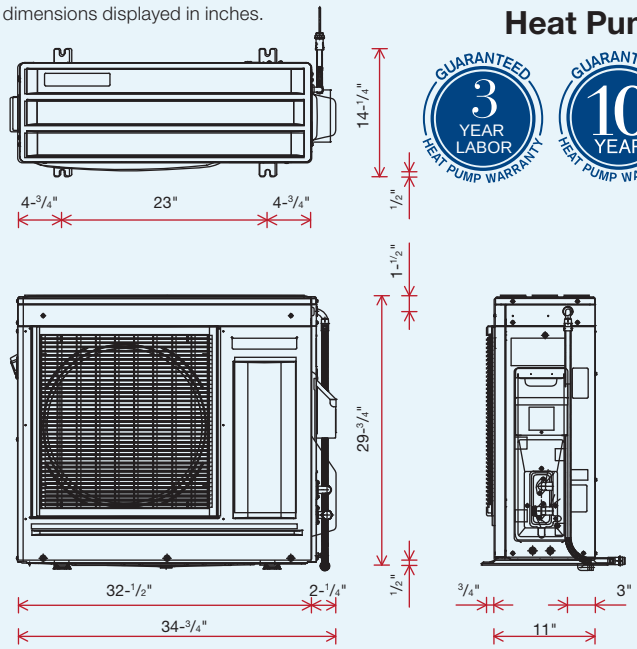

Outdoor Unit (Heat Pump) Model No. GUS-A45HPA

Performance	43-gal. system	83-gal. system
Energy Factor	2.65	3.35
First Hour Rating	69 gallons	97 gallons
Specifications		
Water Temperature Setting	149°F	
Ambient Air Operating Temperature	-15°F to +110°F	
Heat Pump Capacity	15,400 Btu/h	
Heat Pump Capacity	4.5 kW	
Heat Pump COP	4.5	
Refrigerant Type	R744 (CO_2)	
Compressor Type	Inverter	
Power Voltage	208/230v –1Ph – 60Hz	
Breaker Size	15 Amps	
MCA	7.7 Amps	
Outdoor Operating Noise Level	38 dB	
Weight	123 lbs	
Pipe Size (Tank to Heat Pump)	1/2" (Cold & Hot)	
Max Length Inc Vertical	25 ft	
Max Vertical Separation	10 ft	
Max Water Pressure	95 Psig	

Stainless Steel Storage Tank

PRO RATA 15 YEAR TANK WARRANTY

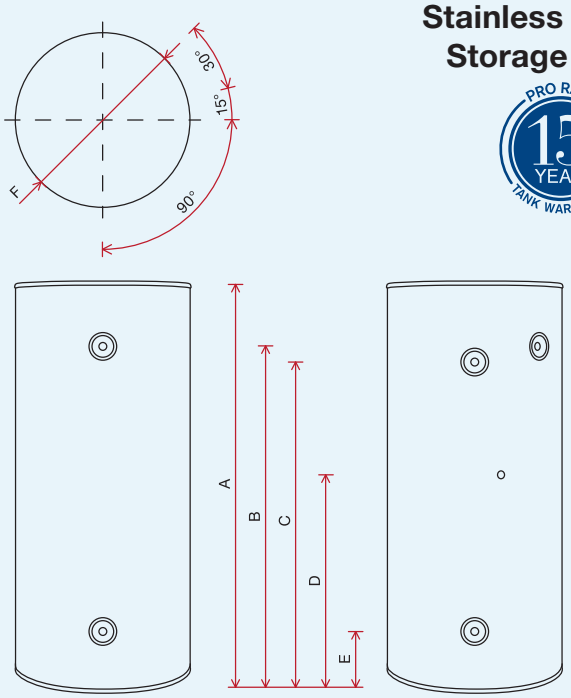

Tank Model No:	GAUS-160QTA	GAUS-315EQTD
A Height	47-1/4"	58-5/8"
B Hot Water Outlet & PR Valve	37-3/8"	49-5/8"
C Heat Pump Return	37-3/8"	49-5/8"
D Sensor Port	17-1/8"	37"
E Cold Water Inlet / Cold Water to HP	8-1/4"	7-7/8"
F Diameter	22-1/2"	26-3/4"
Weight (lbs)	88 lbs	154 lbs
Tank Capacity (gallons)	43 gallons	83 gallons
Connection Sizes		
Cold Water Inlet	3/4" NPT	3/4" NPT
Hot Water Outlet	3/4" NPT	3/4" NPT
Cold Water to Heat Pump	1/2" NPT	1/2" NPT
Hot Water Return from Heat Pump	1/2" NPT	1/2" NPT
Pressure Relief Valve Setting (Psig)	125 Psig	125 Psig

Note: Materials and specifications are subject to change without notice.

REV 0916

INTERTEK ETL LISTED c US

For more information, please call **1-844-SANDCO2** or email **info@sandenwaterheater.com**.

SANDEN Delivering Excellence

Sanden International (U.S.A.) Inc.
47772 Halyard Drive, Plymouth, MI 48170

Phone: 1-844-726-3262 or 1-844-SANDCO2
Email: info@sandenwaterheater.com
Website: www.sandenwaterheater.com

Sanden Dealer

Bell & Gossett GPX™

Gasketed Plate Heat Exchanger Specification Sheet

175 Standard Parkway
Cheektowaga, New York 14227
1-800-447-7700
www.bellgossett.com

Customer		Date	Thursday, July 27, 2017
Inquiry Number	2013-5-14-5:11	Item Number	

Performance of One Unit: AP22 PN: BY5434 **Units Connected in Parallel:** 1

Fluid Name	Water		Water	
Total Flow	444.92	GPM	441.79	GPM
Inlet Temperature	135.00	°F	85.00	°F
Outlet Temperature	115.00	°F	105.00	°F
Operating Pressure	0.00	PSIG	0.00	PSIG
Pressure Drop, Allow./Calc	5.00/4.84	PSIG	5.00/4.82	PSIG
Density	61.59	lb/ft3	61.99	lb/ft3
Viscosity	0.56	cp	0.76	cp
Specific Heat	1.00	Btu/lbm,°F	1.00	Btu/lbm,°F
Thermal Conductivity	0.37	Btu/ft,h,°F	0.36	Btu/ft,h,°F
Specified Fouling Factor	0.00000	hr,ft2,°F/Btu	0.00000	hr,ft2,°F/Btu

Total Heat Exchanged	4,400,000.00	Btu/h
LMTD	30.00	°F
Overall Heat Transfer Coefficient, Clean/Dirty	912.19/912.19	Btu/hr,ft2,°F
Overall Heat Transfer Coefficient, Service	887.83	Btu/hr,ft2,°F
Effective Surface Area	165.12	ft2
Excess Surface	2.74	%

Construction

Number of Passes * Channels	1*30	1*30
Total Number of Plates	61	
Pressure, Design/Test	150/195(PSIG)	150/195(PSIG)
Design Temperature, min/max	32/284(°F)	32/284(°F)
Internal Volume	0.79(ft3)	0.79(ft3)
Inlet Connection(Location)	F1, 316SS lined studded port for 150# ansi flange 4.00 "	F3, 316SS lined studded port for 150# ansi flange 4.00 "
Outlet Connection(Location)	F4, 316SS lined studded port for 150# ansi flange 4.00 "	F2, 316SS lined studded port for 150# ansi flange 4.00 "

Plate Material	304
Plate Thickness	0.40 mm
Plate Mix	TK
Gasket Material	NITRILE HT
Empty/Flooded Weight	1,058 / 1,157 lb
Frame Size / Max. Frame Capacity	39.37 inch / 121 plates
Approvals	ASME Sect VIII Div 1 w/U stamp.
Notes	This heat exchanger is certified by the AHRI Liquid to Liquid heat exchangers certification program based on AHRI Standard 400. AHRI certified units are subject to rigorous and continuous testing, have performance ratings independently measured and are third party verified. Certified units may be found in the AHRI directory at www.ahridirectory.org.

Note: Customer to verify fluid/material compatibility.

Performance evaluation is dependent on customers' ability to provide sufficiently accurate measurements.

REV NO.	REVISION NOTE	REV BY	REV DATE

NOTE(s): 1. Dimensions shown in inches (in.)

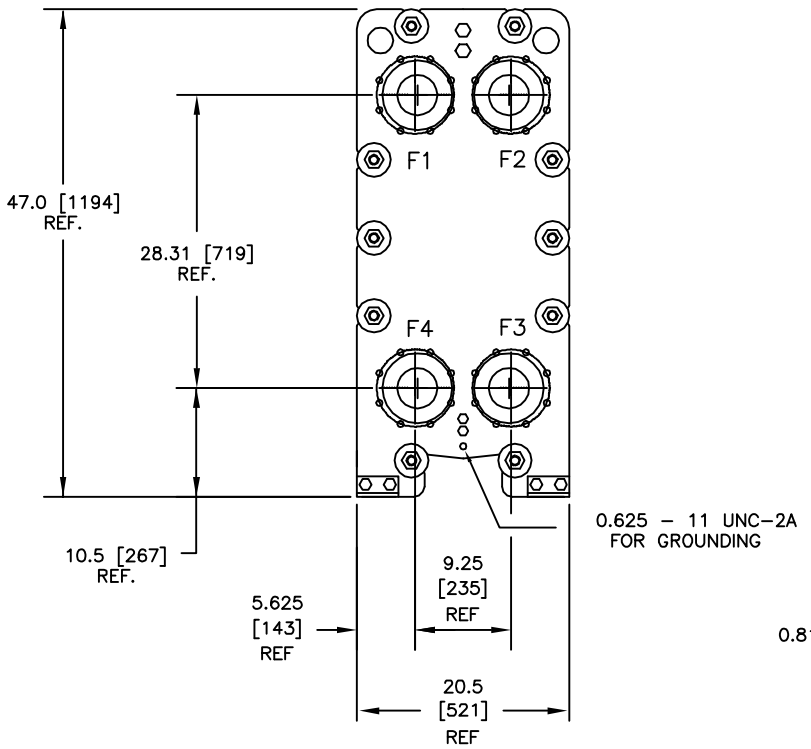

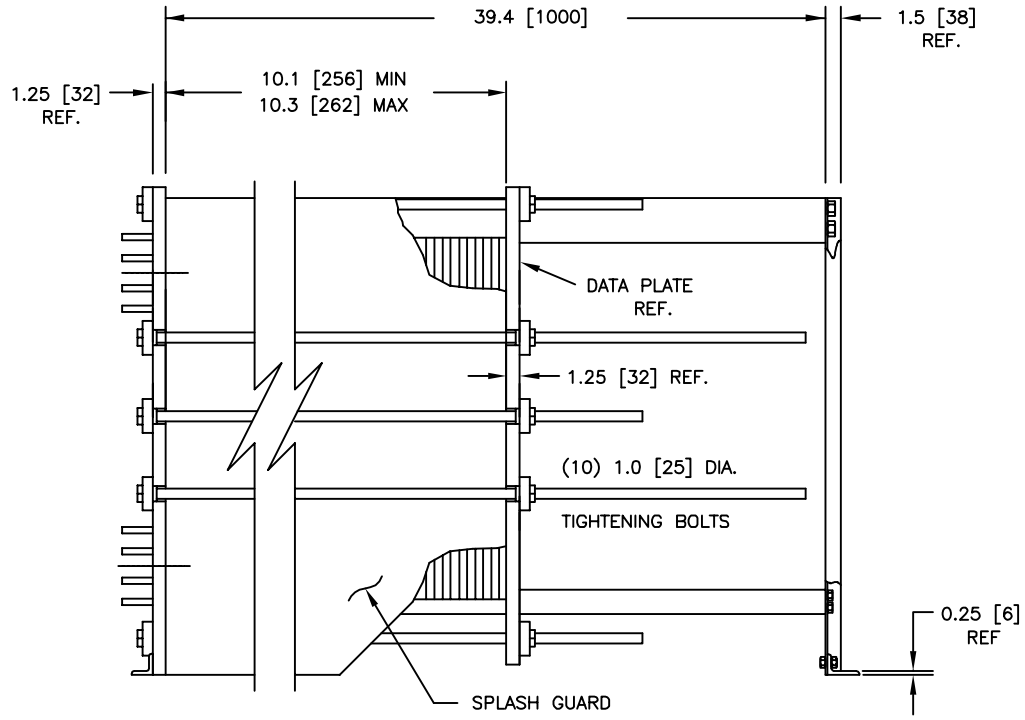

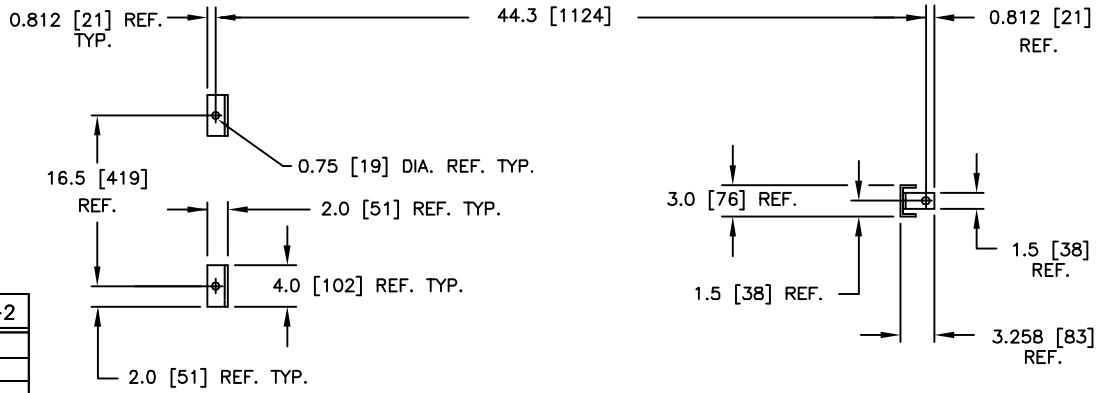

EST. WEIGHT (LBS): 1058 DRY / 1157 WET

UNIT CONSTRUCTION – ASME CODE	
THERMAL PLATES:	0.4mm / 304
GASKET TYPE:	NITRILE HT
PLATE MIXTURE:	TK
MIX (SIDE 1):	1 x 30
MIX (SIDE 2):	1 x 30
PLATE QUANTITY:	61 / 121 MAX
CARRY BAR LGTH:	1000mm
CARRY BAR MTL:	ALUM, S/S PROFILE
TIE BOLTS:	ZINC PLATED CARBON
SPLASH GUARD:	ALUMINUM

DESIGN CONDITIONS:	SIDE–1	SIDE–2
DSGN PRESS. (PSIG)	150.0	150.0
TEST PRESS. (PSIG)	195.0	195.0
DSGN TEMP. (°F)	284	284
MIN. TEMP. (°F)	32	32

PORT IDENTIFICATION		CONNECTION – TYPE AND DESCRIPTION
F1	SIDE–1 IN	4" PORT, STUDDED FOR 150# ANSI FLANGE, w/ 316SS LINER
F4	SIDE–1 OUT	4" PORT, STUDDED FOR 150# ANSI FLANGE, w/ 316SS LINER
F3	SIDE–2 IN	4" PORT, STUDDED FOR 150# ANSI FLANGE, w/ 316SS LINER
F2	SIDE–2 OUT	4" PORT, STUDDED FOR 150# ANSI FLANGE, w/ 316SS LINER

This document contains material and/or information which is the property of Xylem Inc., and supplied only on a confidential basis. No transmittal or disclosure shall be made to any person, firm, or corporation without prior written approval of Xylem Inc..

ORDER NO.	MADE:	ITT	07/27/17
NA	CHK:	HT	07/27/17

Bell & Gossett
Buffalo, NY 14227 USA

MODEL AP22

2013–5–14–5:11 –00

REV.

Bell & Gossett GPX™

Gasketed Plate Heat Exchanger Specification Sheet

175 Standard Parkway
Cheektowaga, New York 14227
1-800-447-7700
www.bellgossett.com

Customer		Date	Thursday, July 27, 2017
Inquiry Number	2013-5-14-5:11	Item Number	

Performance of One Unit: AP7 PN: BY5442 **Units Connected in Parallel:** 1

Fluid Name	Water		Water	
Total Flow	83.42	GPM	82.83	GPM
Inlet Temperature	135.00	°F	85.00	°F
Outlet Temperature	115.00	°F	105.00	°F
Operating Pressure	0.00	PSIG	0.00	PSIG
Pressure Drop, Allow./Calc	5.00/4.91	PSIG	5.00/4.53	PSIG
Density	61.59	lb/ft3	61.99	lb/ft3
Viscosity	0.56	cp	0.76	cp
Specific Heat	1.00	Btu/lbm,°F	1.00	Btu/lbm,°F
Thermal Conductivity	0.37	Btu/ft,h,°F	0.36	Btu/ft,h,°F
Specified Fouling Factor	0.00000	hr,ft2,°F/Btu	0.00000	hr,ft2,°F/Btu

Total Heat Exchanged	825,000.00	Btu/h
LMTD	30.00	°F
Overall Heat Transfer Coefficient, Clean/Dirty	1,163.96/1,163.96	Btu/hr,ft2,°F
Overall Heat Transfer Coefficient, Service	1,140.01	Btu/hr,ft2,°F
Effective Surface Area	24.11	ft2
Excess Surface	2.10	%

Construction

Number of Passes * Channels	1*16		1*17
Total Number of Plates		34	
Pressure, Design/Test	150/195(PSIG)		150/195(PSIG)
Design Temperature, min/max	32/284(°F)		32/284(°F)
Internal Volume	0.11(ft3)		0.12(ft3)
Inlet Connection(Location)	F1, 316SS male npt 2.00 "		F3, 316SS male npt 2.00 "
Outlet Connection(Location)	F4, 316SS male npt 2.00 "		F2, 316SS male npt 2.00 "

Plate Material	316
Plate Thickness	0.50 mm
Plate Mix	TMTL-21
Gasket Material	NITRILE HT
Empty/Flooded Weight	238 / 252 lb
Frame Size / Max. Frame Capacity	15.75 inch / 49 plates
Approvals	ASME Sect VIII Div 1 w/U stamp.
Notes	This heat exchanger is certified by the AHRI Liquid to Liquid heat exchangers certification program based on AHRI Standard 400. AHRI certified units are subject to rigorous and continuous testing, have performance ratings independently measured and are third party verified. Certified units may be found in the AHRI directory at www.ahridirectory.org.

Note: Customer to verify fluid/material compatibility.

Performance evaluation is dependent on customers' ability to provide sufficiently accurate measurements.

REV NO.	REVISION NOTE	REV BY	REV DATE

NOTE(s): 1. Dimensions shown in inches (in.)

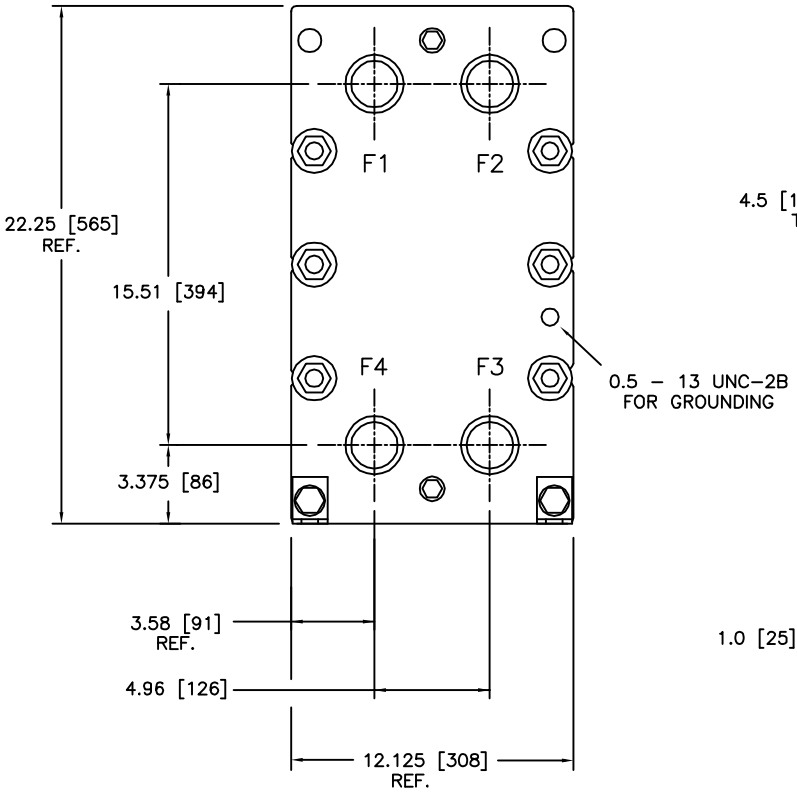

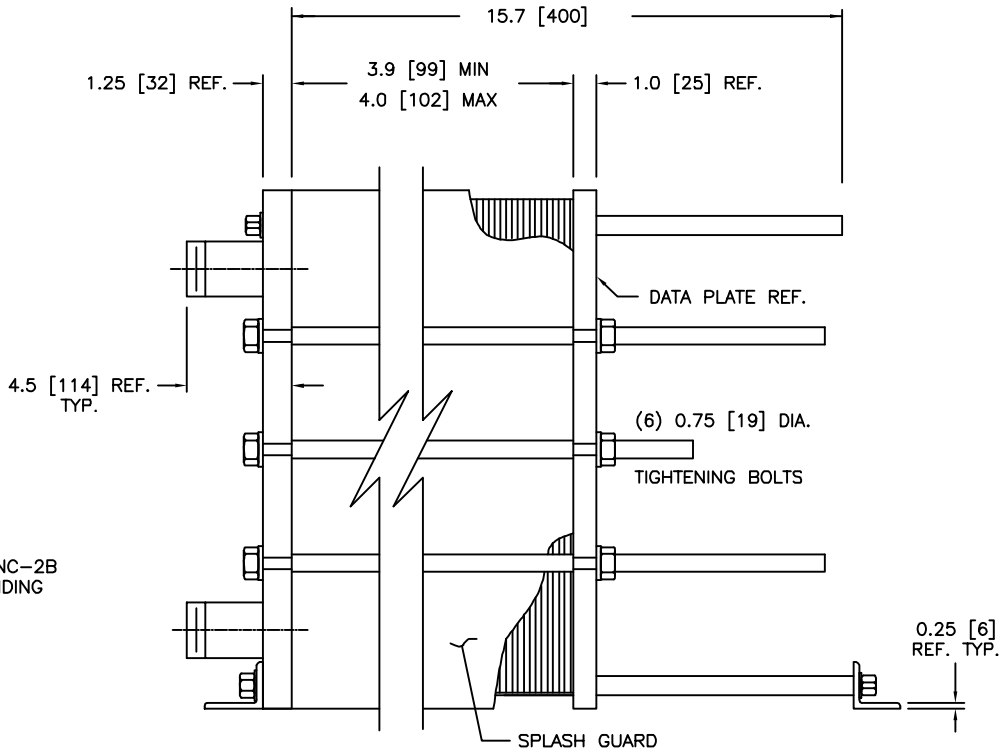

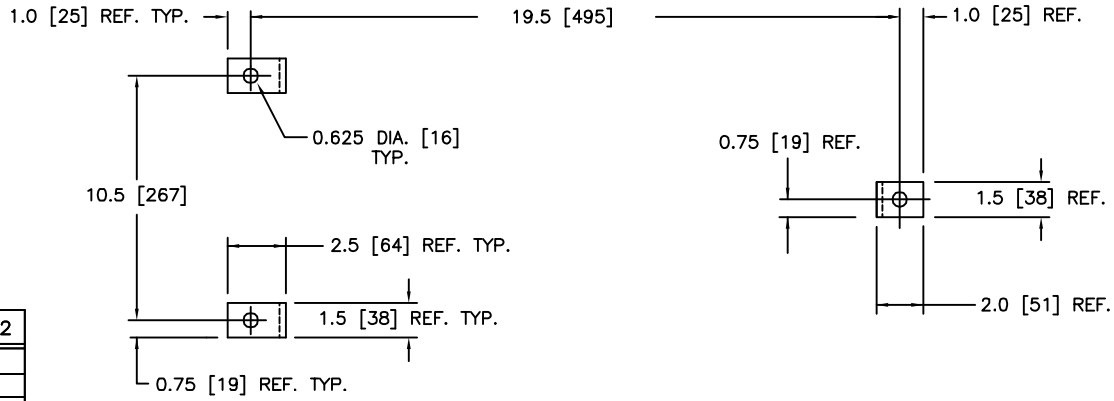

EST. WEIGHT (LBS): 238 DRY / 252 WET

UNIT CONSTRUCTION – ASME CODE	
THERMAL PLATES:	0.5mm / 316
GASKET TYPE:	NITRILE HT
PLATE MIXTURE:	TMTL–21
MIX (SIDE 1):	1 x 16
MIX (SIDE 2):	1 x 17
PLATE QUANTITY:	34 / 49 MAX
CARRY BAR LGTH:	400mm
CARRY BAR MTL:	SS
TIE BOLTS:	ZINC PLATED CARBON
SPLASH GUARD:	ALUMINUM

DESIGN CONDITIONS:	SIDE–1	SIDE–2
DSGN PRESS. (PSIG)	150.0	150.0
TEST PRESS. (PSIG)	195.0	195.0
DSGN TEMP. (°F)	284	284
MIN. TEMP. (°F)	32	32

PORT IDENTIFICATION		CONNECTION – TYPE AND DESCRIPTION
F1	SIDE–1 IN	2" NPT (EXTERNAL), 316SS
F4	SIDE–1 OUT	2" NPT (EXTERNAL), 316SS
F3	SIDE–2 IN	2" NPT (EXTERNAL), 316SS
F2	SIDE–2 OUT	2" NPT (EXTERNAL), 316SS

This document contains material and/or information which is the property of Xylem Inc., and supplied only on a confidential basis. No transmittal or disclosure shall be made to any person, firm, or corporation without prior written approval of Xylem Inc..

MADE:	ITT	07/27/17
CHK:	HT	07/27/17

ORDER NO.: NA

Bell & Gossett
Buffalo, NY 14227 USA

MODEL AP07

2013–5–14–5:11 –00

REV.

Bell & Gossett GPX™

Gasketed Plate Heat Exchanger Specification Sheet

175 Standard Parkway
Cheektowaga, New York 14227
1-800-447-7700
www.bellgossett.com

Customer		Date	Thursday, July 27, 2017
Inquiry Number	2013-5-14-5:11	Item Number	

Performance of One Unit: AP22 PN: BY5434 **Units Connected in Parallel:** 1

Fluid Name	Water		Water	
Total Flow	151.68	GPM	150.61	GPM
Inlet Temperature	135.00	°F	85.00	°F
Outlet Temperature	115.00	°F	105.00	°F
Operating Pressure	0.00	PSIG	0.00	PSIG
Pressure Drop, Allow./Calc	5.00/3.14	PSIG	5.00/3.12	PSIG
Density	61.59	lb/ft3	61.99	lb/ft3
Viscosity	0.56	cp	0.76	cp
Specific Heat	1.00	Btu/lbm,°F	1.00	Btu/lbm,°F
Thermal Conductivity	0.37	Btu/ft,h,°F	0.36	Btu/ft,h,°F
Specified Fouling Factor	0.00000	hr,ft2,°F/Btu	0.00000	hr,ft2,°F/Btu

Total Heat Exchanged	1,500,000.00	Btu/h
LMTD	30.00	°F
Overall Heat Transfer Coefficient, Clean/Dirty	864.92/864.92	Btu/hr,ft2,°F
Overall Heat Transfer Coefficient, Service	850.36	Btu/hr,ft2,°F
Effective Surface Area	58.77	ft2
Excess Surface	1.71	%

Construction

Number of Passes * Channels	1*11	1*11
Total Number of Plates	23	
Pressure, Design/Test	150/195(PSIG)	150/195(PSIG)
Design Temperature, min/max	32/284(°F)	32/284(°F)
Internal Volume	0.29(ft3)	0.29(ft3)
Inlet Connection(Location)	F1, 316SS lined studded port for 150# ansi flange 4.00 "	F3, 316SS lined studded port for 150# ansi flange 4.00 "
Outlet Connection(Location)	F4, 316SS lined studded port for 150# ansi flange 4.00 "	F2, 316SS lined studded port for 150# ansi flange 4.00 "

Plate Material	304
Plate Thickness	0.40 mm
Plate Mix	TK
Gasket Material	NITRILE HT
Empty/Flooded Weight	945 / 981 lb
Frame Size / Max. Frame Capacity	23.62 inch / 54 plates
Approvals	ASME Sect VIII Div 1 w/U stamp.
Notes	This heat exchanger is certified by the AHRI Liquid to Liquid heat exchangers certification program based on AHRI Standard 400. AHRI certified units are subject to rigorous and continuous testing, have performance ratings independently measured and are third party verified. Certified units may be found in the AHRI directory at www.ahridirectory.org.

Note: Customer to verify fluid/material compatibility.

Performance evaluation is dependent on customers' ability to provide sufficiently accurate measurements.

REV NO.	REVISION NOTE	REV BY	REV DATE

NOTE(s): 1. Dimensions shown in inches (in.)

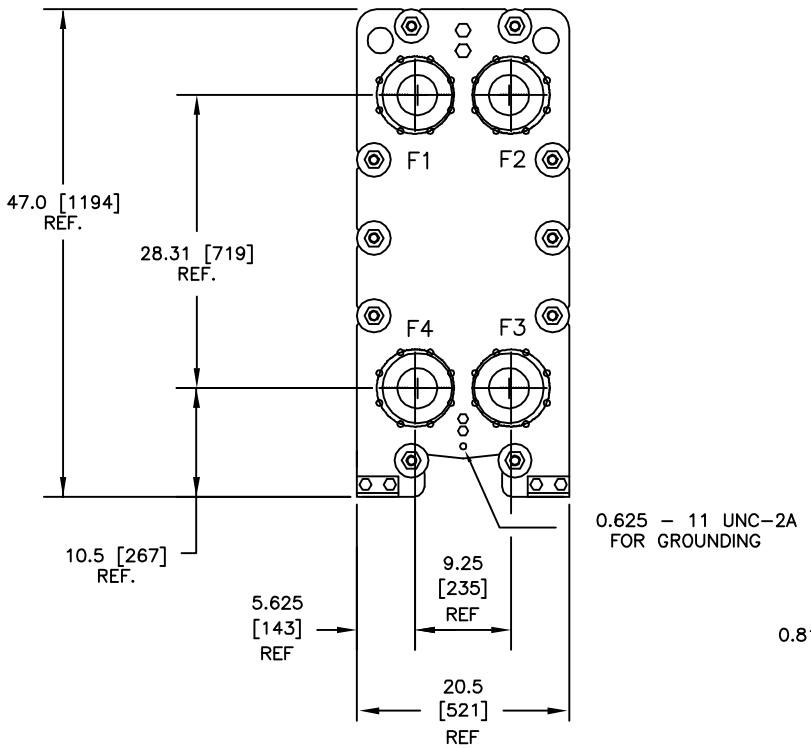

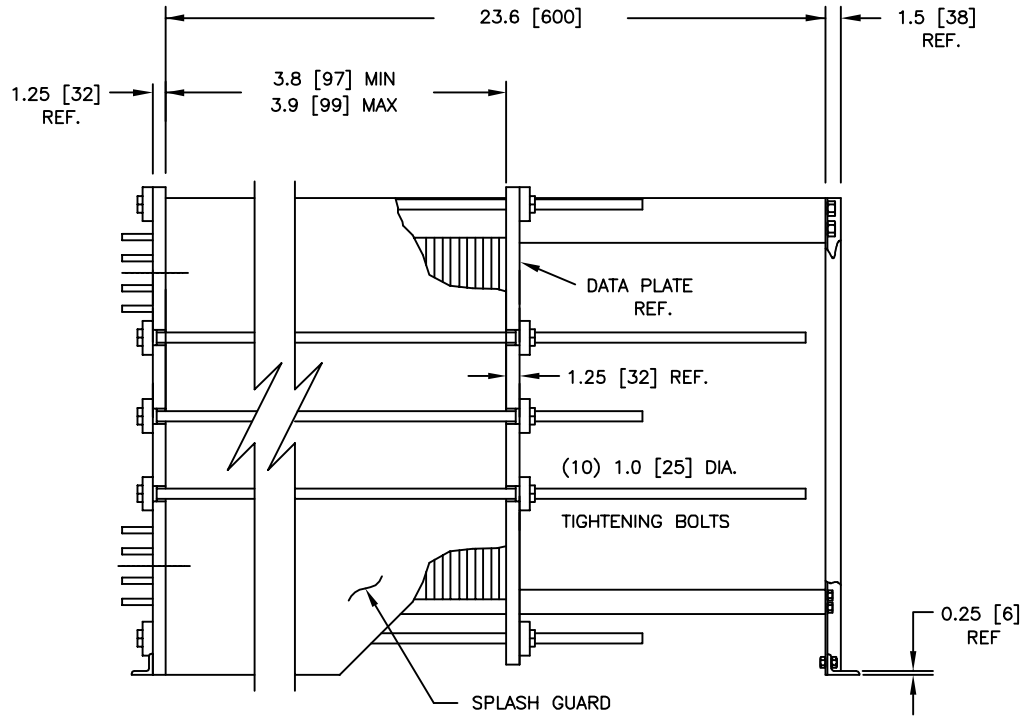

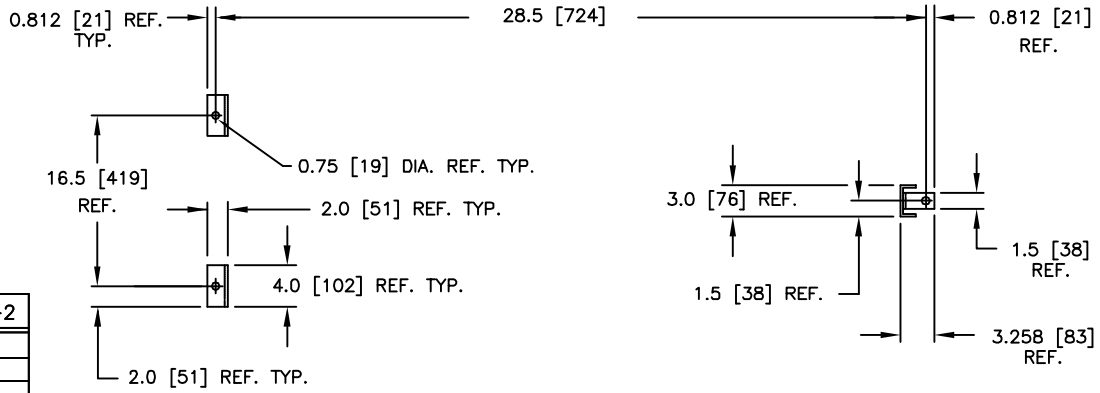

EST. WEIGHT (LBS): 945 DRY / 981 WET

UNIT CONSTRUCTION – ASME CODE	
THERMAL PLATES:	0.4mm / 304
GASKET TYPE:	NITRILE HT
PLATE MIXTURE:	TK
MIX (SIDE 1):	1 x 11
MIX (SIDE 2):	1 x 11
PLATE QUANTITY:	23 / 54 MAX
CARRY BAR LGTH:	600mm
CARRY BAR MTL:	ALUM, S/S PROFILE
TIE BOLTS:	ZINC PLATED CARBON
SPLASH GUARD:	ALUMINUM

DESIGN CONDITIONS:	SIDE–1	SIDE–2
DSGN PRESS. (PSIG)	150.0	150.0
TEST PRESS. (PSIG)	195.0	195.0
DSGN TEMP. (°F)	284	284
MIN. TEMP. (°F)	32	32

PORT IDENTIFICATION		CONNECTION – TYPE AND DESCRIPTION
F1	SIDE–1 IN	4" PORT, STUDDED FOR 150# ANSI FLANGE, w/ 316SS LINER
F4	SIDE–1 OUT	4" PORT, STUDDED FOR 150# ANSI FLANGE, w/ 316SS LINER
F3	SIDE–2 IN	4" PORT, STUDDED FOR 150# ANSI FLANGE, w/ 316SS LINER
F2	SIDE–2 OUT	4" PORT, STUDDED FOR 150# ANSI FLANGE, w/ 316SS LINER

This document contains material and/or information which is the property of Xylem Inc., and supplied only on a confidential basis. No transmittal or disclosure shall be made to any person, firm, or corporation without prior written approval of Xylem Inc..

	MADE: ITT	07/27/17
NA	CHK: HT	07/27/17

ORDER NO.

Bell & Gossett
Buffalo, NY 14227 USA

MODEL AP22

2013–5–14–5:11 –00

REV.

Bell & Gossett GPX™

Gasketed Plate Heat Exchanger Specification Sheet

175 Standard Parkway
Cheektowaga, New York 14227
1-800-447-7700
www.bellgossett.com

Customer		Date	Thursday, July 27, 2017
Inquiry Number	2013-5-14-5:11	Item Number	

Performance of One Unit: AP7 PN: BY5442 **Units Connected in Parallel:** 1

Fluid Name	Water		Water	
Total Flow	50.56	GPM	50.20	GPM
Inlet Temperature	135.00	°F	85.00	°F
Outlet Temperature	115.00	°F	105.00	°F
Operating Pressure	0.00	PSIG	0.00	PSIG
Pressure Drop, Allow./Calc	5.00/3.05	PSIG	5.00/2.97	PSIG
Density	61.59	lb/ft3	61.99	lb/ft3
Viscosity	0.56	cp	0.76	cp
Specific Heat	1.00	Btu/lbm,°F	1.00	Btu/lbm,°F
Thermal Conductivity	0.37	Btu/ft,h,°F	0.36	Btu/ft,h,°F
Specified Fouling Factor	0.00000	hr,ft2,°F/Btu	0.00000	hr,ft2,°F/Btu

Total Heat Exchanged	500,000.00	Btu/h
LMTD	30.00	°F
Overall Heat Transfer Coefficient, Clean/Dirty	1,053.14/1,053.14	Btu/hr,ft2,°F
Overall Heat Transfer Coefficient, Service	1,052.83	Btu/hr,ft2,°F
Effective Surface Area	15.82	ft2
Excess Surface	0.03	%

Construction

Number of Passes * Channels	1*11		1*11
Total Number of Plates		23	
Pressure, Design/Test	150/195(PSIG)		150/195(PSIG)
Design Temperature, min/max	32/284(°F)		32/284(°F)
Internal Volume	0.08(ft3)		0.08(ft3)
Inlet Connection(Location)	F1, 316SS male npt 2.00 "		F3, 316SS male npt 2.00 "
Outlet Connection(Location)	F4, 316SS male npt 2.00 "		F2, 316SS male npt 2.00 "

Plate Material	316
Plate Thickness	0.50 mm
Plate Mix	TM
Gasket Material	NITRILE HT
Empty/Flooded Weight	226 / 236 lb
Frame Size / Max. Frame Capacity	15.75 inch / 49 plates
Approvals	ASME Sect VIII Div 1 w/U stamp.
Notes	This heat exchanger is certified by the AHRI Liquid to Liquid heat exchangers certification program based on AHRI Standard 400. AHRI certified units are subject to rigorous and continuous testing, have performance ratings independently measured and are third party verified. Certified units may be found in the AHRI directory at www.ahridirectory.org.

Note: Customer to verify fluid/material compatibility.

Performance evaluation is dependent on customers' ability to provide sufficiently accurate measurements.

REV NO.	REVISION NOTE	REV BY	REV DATE

NOTE(s): 1. Dimensions shown in inches (in.)

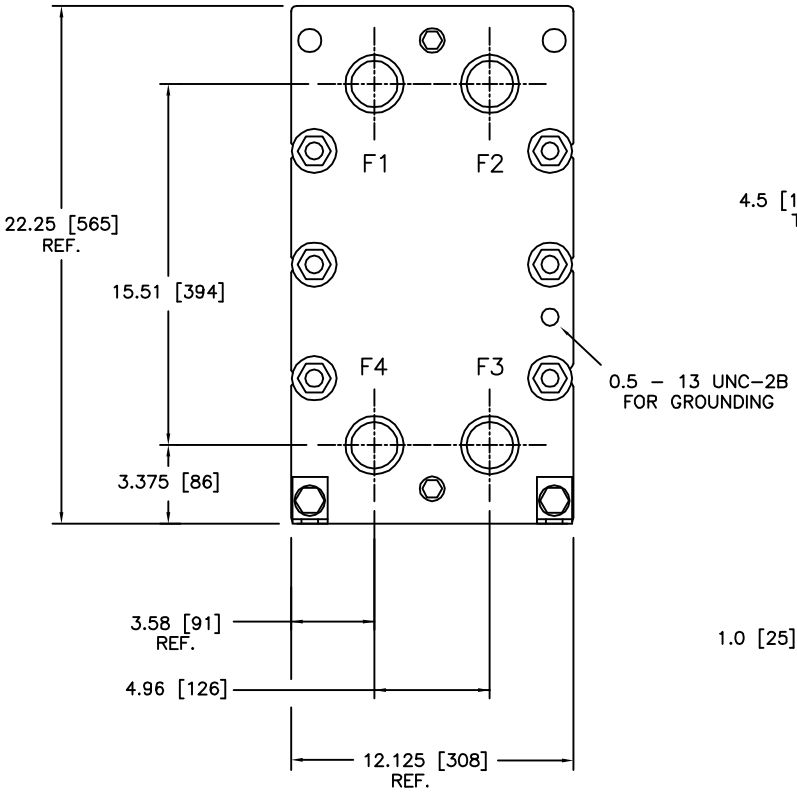

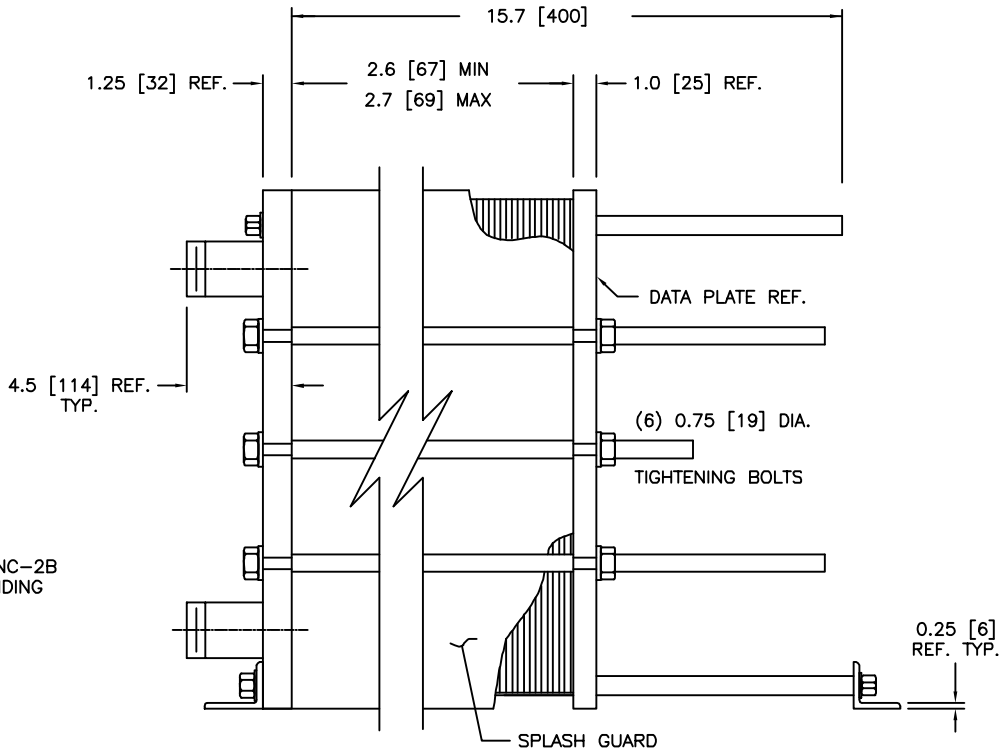

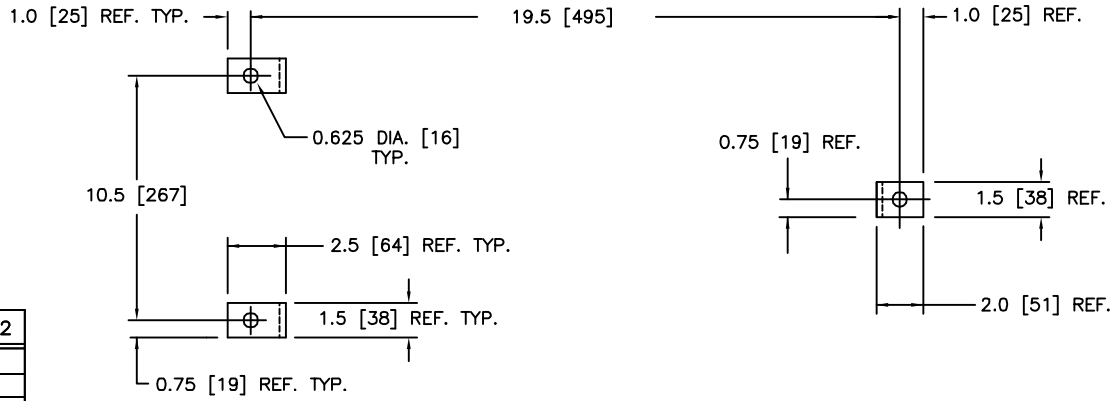

EST. WEIGHT (LBS): 226 DRY / 236 WET

UNIT CONSTRUCTION – ASME CODE	
THERMAL PLATES:	0.5mm / 316
GASKET TYPE:	NITRILE HT
PLATE MIXTURE:	TM
MIX (SIDE 1):	1 x 11
MIX (SIDE 2):	1 x 11
PLATE QUANTITY:	23 / 49 MAX
CARRY BAR LGTH:	400mm
CARRY BAR MTL:	SS
TIE BOLTS:	ZINC PLATED CARBON
SPLASH GUARD:	ALUMINUM

DESIGN CONDITIONS:	SIDE–1	SIDE–2
DSGN PRESS. (PSIG)	150.0	150.0
TEST PRESS. (PSIG)	195.0	195.0
DSGN TEMP. (°F)	284	284
MIN. TEMP. (°F)	32	32

PORT IDENTIFICATION		CONNECTION – TYPE AND DESCRIPTION
F1	SIDE–1 IN	2" NPT (EXTERNAL), 316SS
F4	SIDE–1 OUT	2" NPT (EXTERNAL), 316SS
F3	SIDE–2 IN	2" NPT (EXTERNAL), 316SS
F2	SIDE–2 OUT	2" NPT (EXTERNAL), 316SS

This document contains material and/or information which is the property of Xylem Inc., and supplied only on a confidential basis. No transmittal or disclosure shall be made to any person, firm, or corporation without prior written approval of Xylem Inc..

MADE:	ITT	07/27/17
CHK:	HT	07/27/17

ORDER NO.: NA

Bell & Gossett
Buffalo, NY 14227 USA

MODEL AP07

2013–5–14–5:11 –00

REV.

Bell & Gossett GPX™

Gasketed Plate Heat Exchanger Specification Sheet

175 Standard Parkway
Cheektowaga, New York 14227
1-800-447-7700
www.bellgossett.com

Customer		Date	Thursday, July 27, 2017
Inquiry Number	2013-5-14-5:11	Item Number	

Performance of One Unit: AP7 PN: BY5442 **Units Connected in Parallel:** 1

Fluid Name	Water		Water	
Total Flow	35.39	GPM	35.14	GPM
Inlet Temperature	135.00	°F	85.00	°F
Outlet Temperature	115.00	°F	105.00	°F
Operating Pressure	0.00	PSIG	0.00	PSIG
Pressure Drop, Allow./Calc	5.00/2.19	PSIG	5.00/2.13	PSIG
Density	61.59	lb/ft3	61.99	lb/ft3
Viscosity	0.56	cp	0.76	cp
Specific Heat	1.00	Btu/lbm,°F	1.00	Btu/lbm,°F
Thermal Conductivity	0.37	Btu/ft,h,°F	0.36	Btu/ft,h,°F
Specified Fouling Factor	0.00000	hr,ft2,°F/Btu	0.00000	hr,ft2,°F/Btu

Total Heat Exchanged	350,000.00	Btu/h
LMTD	30.00	°F
Overall Heat Transfer Coefficient, Clean/Dirty	955.97/955.97	Btu/hr,ft2,°F
Overall Heat Transfer Coefficient, Service	910.39	Btu/hr,ft2,°F
Effective Surface Area	12.81	ft2
Excess Surface	5.01	%

Construction

Number of Passes * Channels	1*9		1*9
Total Number of Plates		19	
Pressure, Design/Test	150/195(PSIG)		150/195(PSIG)
Design Temperature, min/max	32/284(°F)		32/284(°F)
Internal Volume	0.06(ft3)		0.06(ft3)
Inlet Connection(Location)	F1, 316SS male npt 2.00 "		F3, 316SS male npt 2.00 "
Outlet Connection(Location)	F4, 316SS male npt 2.00 "		F2, 316SS male npt 2.00 "

Plate Material	316
Plate Thickness	0.50 mm
Plate Mix	TM
Gasket Material	NITRILE HT
Empty/Flooded Weight	222 / 230 lb
Frame Size / Max. Frame Capacity	15.75 inch / 49 plates
Approvals	ASME Sect VIII Div 1 w/U stamp.
Notes	This heat exchanger is certified by the AHRI Liquid to Liquid heat exchangers certification program based on AHRI Standard 400. AHRI certified units are subject to rigorous and continuous testing, have performance ratings independently measured and are third party verified. Certified units may be found in the AHRI directory at www.ahridirectory.org.

Note: Customer to verify fluid/material compatibility.

Performance evaluation is dependent on customers' ability to provide sufficiently accurate measurements.

REV NO.	REVISION NOTE	REV BY	REV DATE

NOTE(s): 1. Dimensions shown in inches (in.)

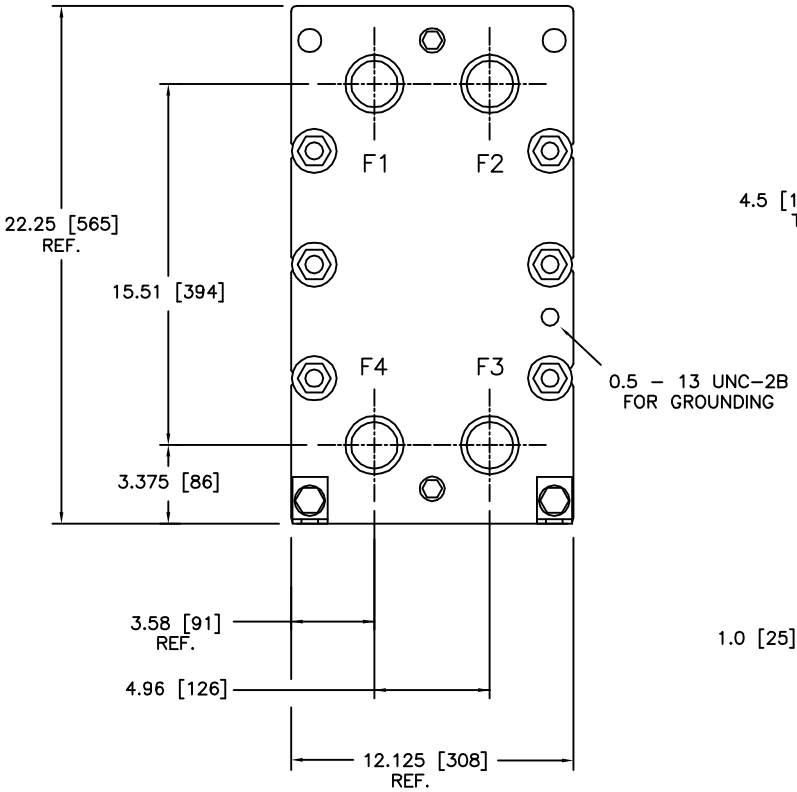

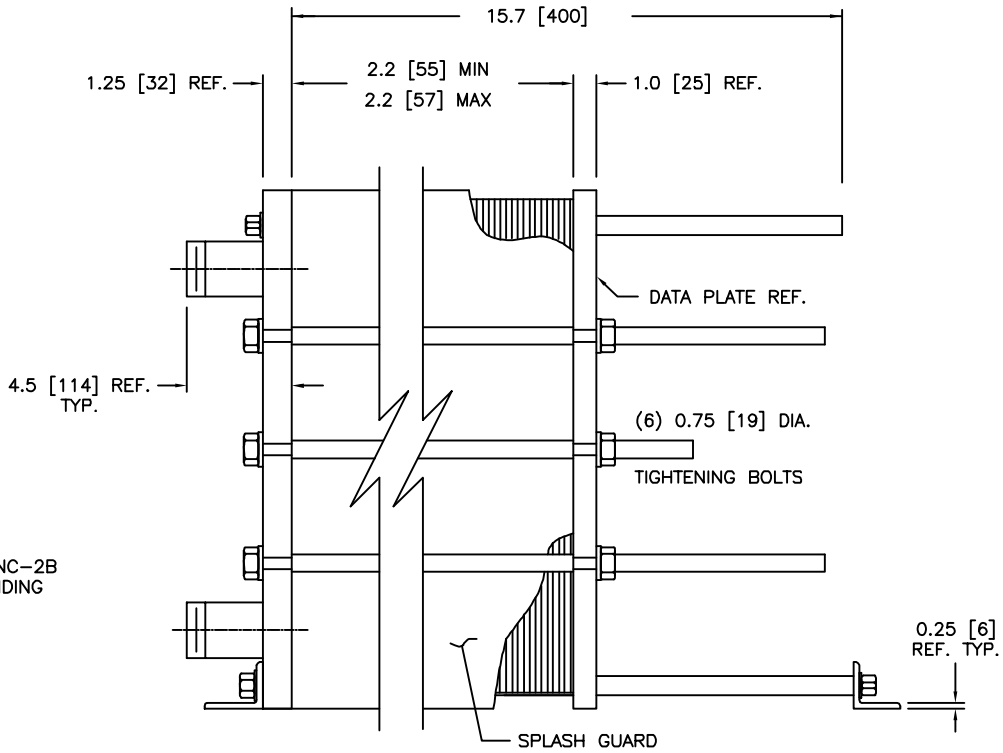

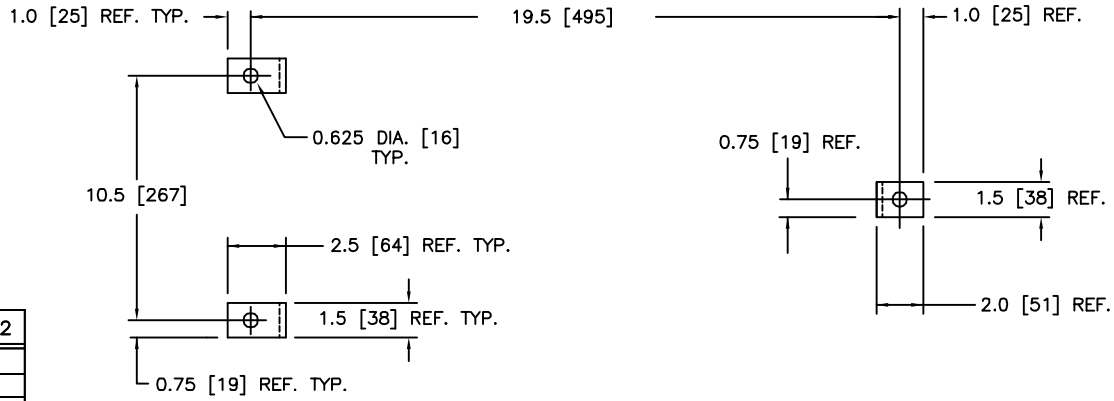

EST. WEIGHT (LBS): 222 DRY / 230 WET

UNIT CONSTRUCTION – ASME CODE	
THERMAL PLATES:	0.5mm / 316
GASKET TYPE:	NITRILE HT
PLATE MIXTURE:	TM
MIX (SIDE 1):	1 x 9
MIX (SIDE 2):	1 x 9
PLATE QUANTITY:	19 / 49 MAX
CARRY BAR LGTH:	400mm
CARRY BAR MTL:	SS
TIE BOLTS:	ZINC PLATED CARBON
SPLASH GUARD:	ALUMINUM

DESIGN CONDITIONS:	SIDE–1	SIDE–2
DSGN PRESS. (PSIG)	150.0	150.0
TEST PRESS. (PSIG)	195.0	195.0
DSGN TEMP. (°F)	284	284
MIN. TEMP. (°F)	32	32

PORT IDENTIFICATION		CONNECTION – TYPE AND DESCRIPTION
F1	SIDE–1 IN	2" NPT (EXTERNAL), 316SS
F4	SIDE–1 OUT	2" NPT (EXTERNAL), 316SS
F3	SIDE–2 IN	2" NPT (EXTERNAL), 316SS
F2	SIDE–2 OUT	2" NPT (EXTERNAL), 316SS

This document contains material and/or information which is the property of Xylem Inc., and supplied only on a confidential basis. No transmittal or disclosure shall be made to any person, firm, or corporation without prior written approval of Xylem Inc..

MADE:	ITT	07/27/17
CHK:	HT	07/27/17

ORDER NO.: NA

Bell & Gossett
Buffalo, NY 14227 USA

MODEL AP07

2013–5–14–5:11 –00

REV.

CERTIFIED SOLAR THERMAL COLLECTOR

SUPPLIER:
Heliodyne, Inc.
4910 Seaport Avenue
Richmond, CA 94804 USA
www.heliodyne.com

MODEL:	Gobi 410 002
THERMAL COLLECTOR TYPE:	Glazed Flat Plate
CERTIFICATION #:	00376D
Original Certification:	March 01, 2009
Expiration Date:	March 01, 2029

This solar collector was evaluated by the Florida Solar Energy Center (FSEC) in accordance with prescribed methods and was found to meet the minimum standards established by FSEC. This evaluation was based on solar collector tests performed by an FSEC approved laboratory. The purpose of the tests is to verify initial performance conditions and quality of construction only. The resulting certification is not a guarantee of long term performance or durability.
This collector has been rated for energy output on measured performance and an assumed standard day. Total solar energy available for the standard day is 5045 Watt-hour/m^2 (1600 Btu/ft^2) distributed over a 10 hour period.

COLLECTOR THERMAL PERFORMANCE RATING							
Kilowatt-hours (thermal) Per Panel Per Day				Thousands of Btu Per Panel Per Day			
Category Inlet	Low 30°C	Intermediate 50°C	High 100°C	Category Inlet	Low 86°F	Intermediate 122°F	High 212°F
ENERGY OUTPUT	12.7	9.7	2.3	ENERGY OUTPUT	43.2	33.2	8.0

COLLECTOR SPECIFICATIONS					
Gross Area:	3.744 m²	40.30 ft²	**Dry Weight:**	69 kg	153 lb
Net Aperture Area:	3.481 m²	37.47 ft²	**Fluid Capacity:**	5.1 liter	1.3 gal
Absorber Area:	0.000 m²	0.00 ft²	**Test Pressure:**	1034 kPa	150 psi

TECHNICAL INFORMATION		**Tested in accordance with:** ASHRAE 96			
ISO Efficiency Equation [NOTE: Based on gross area and (P)=Ti-Ta]					
SI UNITS:	η= 0.725 - 5.360(P/G) - 8.860(P²/G)	**Y Intercept:**	0.733	**Slope:**	-6.110 W/m².°C
IP UNITS:	η= 0.725 - 0.945(P/G) - 0.867(P²/G)	**Y Intercept:**	0.733	**Slope:**	-1.077 Btu/hr.ft².°F

IAM Coefficient:	1 - 0.12	
Test Fluid:		
Test Mass Flow Rate:	kg/(s m²)	lb/(hr ft²)

REMARKS:

Joseph Walters
Technical Director

FSEC-Certified Standard 101

Print Date: August, 2017
© 2014 University of Central Florida.
FSEC/UCF ♦ 1679 Clearlake Road ♦ Cocoa, Florida 32922 ♦ (321) 638-1426 ♦ Fax (321) 638-1010 ♦ www.fsec.ucf.edu

CERTIFIED SOLAR THERMAL COLLECTOR

SUPPLIER:
Heliodyne, Inc.
4910 Seaport Avenue
Richmond, CA 94804 USA
www.heliodyne.com

MODEL:	Gobi 410 002
THERMAL COLLECTOR TYPE:	Glazed Flat Plate
CERTIFICATION #:	00376D
Original Certification:	March 01, 2009
Expiration Date:	March 01, 2029

This solar collector was evaluated by the Florida Solar Energy Center (FSEC) in accordance with prescribed methods and was found to meet the minimum standards established by FSEC. This evaluation was based on solar collector tests performed by an FSEC approved laboratory. The purpose of the tests is to verify initial performance conditions and quality of construction only. The resulting certification is not a guarantee of long term performance or durability.
This collector has been rated for energy output on measured performance and an assumed standard day. Total solar energy available for the standard day is 5045 Watt-hour/m^2 (1600 Btu/ft^2) distributed over a 10 hour period.

ADDITIONAL INFORMATION (click here to return to the rating page)			
Test Lab:	DSET	Test Report Date:	June 21, 1984
Test Report Number:		Test conducted:	

SOLAR COLLECTOR CONSTRUCTION DETAILS					
Gross Length:	3.088 m	**Gross Width:**	1.208 m	**Gross Depth:**	98.5 mm

COLLECTOR MATERIALS					
Outer Cover:	Other	**Enclosure back:**	Aluminum	**Back Insulation:**	Foam, None
Inner Cover:	None	**Enclosure side:**	Aluminum	**Side Insulation:**	,
Absorber Description:		**Flow Pattern:**			
Riser Tube:	Other	**Fin:**			
Absorber Coating:	Moderately selective	**Tube to fin connection**			

Glazing	Outer Cover	Inner Cover
Material:	Other	None
Surface Characteristics:		
Thickness:		N/A
Transmissivity:		
Length:	0.000 m	
Width:	0.000 m	
Tube Glazing to Header Enclosure Seal:		

ABSORBER:	Absorber Coating:	Moderately selective

FSEC-Certified Standard 101

Print Date: August, 2017
© 2014 University of Central Florida.
FSEC/UCF ♦ 1679 Clearlake Road ♦ Cocoa, Florida 32922 ♦ (321) 638-1426 ♦ Fax (321) 638-1010 ♦ www.fsec.ucf.edu

Header Material:		**Header OD:**		**Header Wall:**	
Riser Tube Material:	Other	**Riser Tube OD:**		**Riser Tube Wall Thickness:**	
Fin Material:		**Fin Thickness:**	0.00 mm		
Flow Pattern:					
Number of Riser Tubes:	11	**Tube Spacing:**		**Number of times each riser crosses the absorber:**	11
Length of Flow Path:	0.00 m	**Riser to Fin/Plate Bond:**			

INSULATION:					
Location	**Type**	**Thickness**	**Location**	**Type**	**Thickness**
Back – Top Layer:	Foam		**Sides – Inner Layer:**		
Back – Bottom Layer:	None		**Sides – Outer Layer:**		
Enclosure Fastening Methods:					

Power Output per Collector(W) **[Ti-Ta, G = 1000 W/m²]**				
0	**10**	**30**	**50**	**70**

PRESSURE DROP	
SI UNITS:	ΔP = pressure drop (kpa), f = mass flow rate (kg/s) **ΔP**= 0.00 + 0.00f + f²
IP UNITS:	ΔP = pressure drop (psi), f = mass flow rate (lb/s) **ΔP**= 0.00 + 0.00f + f²

Print Date: August, 2017

© 2014 University of Central Florida.

FSEC/UCF ♦ 1679 Clearlake Road ♦ Cocoa, Florida 32922 ♦ (321) 638-1426 ♦ Fax (321) 638-1010 ♦ www.fsec.ucf.edu

CERTIFIED SOLAR THERMAL COLLECTOR

SUPPLIER:
Pool Heating Distributors
5919 21st St. East
Bradenton, FL 34203 USA

MODEL:	Vortex VT48
THERMAL COLLECTOR TYPE:	Unglazed Flat Plate
CERTIFICATION #:	98007C
Original Certification:	December 01, 2003
Expiration Date:	December 01, 2023

This solar collector was evaluated by the Florida Solar Energy Center (FSEC) in accordance with prescribed methods and was found to meet the minimum standards established by FSEC. This evaluation was based on solar collector tests performed by an FSEC approved laboratory. The purpose of the tests is to verify initial performance conditions and quality of construction only. The resulting certification is not a guarantee of long term performance or durability.
This collector has been rated for energy output on measured performance and an assumed standard day. Total solar energy available for the standard day is 5045 Watt-hour/m^2 (1600 Btu/ft^2) distributed over a 10 hour period.

COLLECTOR THERMAL PERFORMANCE RATING (Collector Tested per ASHRAE 96)							
Kilowatt-hours (thermal) Per m^2 Per Day				**Thousands of Btu Per ft^2 Per Day**			
Category Inlet	Low 30°C	Intermediate 50°C	High 100°C	Category Inlet	Low 86°F	Intermediate 122°F	High 212°F
ENERGY OUTPUT	3.0	1.3	0.0	ENERGY OUTPUT	1.0	0.4	0.0

COLLECTOR SPECIFICATIONS					
Gross Area:	4.426 m²	47.64 ft²	**Dry Weight:**	14 kg	30 lb
Net Aperture Area:	4.426 m²	47.64 ft²	**Fluid Capacity:**	15.5 liter	4.1 gal
Absorber Area:	4.426 m²	47.64 ft²	**Test Pressure:**	241 kPa	35 psi

TECHNICAL INFORMATION	**Tested in accordance with:** ASHRAE 96
Efficiency Equation [NOTE: Based on gross area and (P)=Ti-Ta]	
SI UNITS:	Wind speed (u) < 1.5 m/s, Temperature (Ti – Ta) in °C, Radiation (G) in W/m² $\eta = 0.804 - 15.480(P/G) - 43.720(P^2/G)$
IP UNITS:	Wind speed (u) < 3 mph, Temperature (Ti – Ta) in °F, Radiation (G) in Btu/hr-ft² $\eta = 0.804 - 2.728(P/G) - 4.277(P^2/G)$

IAM Coefficient:	1 - 0.12	
Test Fluid:		
Test Mass Flow Rate:	kg/(s m²)	lb/(hr ft²)

REMARKS:

Joseph Walters
Technical Director

Print Date: August, 2017
© 2014 University of Central Florida.
FSEC/UCF ♦ 1679 Clearlake Road ♦ Cocoa, Florida 32922 ♦ (321) 638-1426 ♦ Fax (321) 638-1010 ♦ www.fsec.ucf.edu

FSEC-Certified Standard 101

Bell & Gossett GPX™

Gasketed Plate Heat Exchanger Specification Sheet

175 Standard Parkway
Cheektowaga, New York 14227
1-800-447-7700
www.bellgossett.com

Customer		Date	Thursday, July 27, 2017
Inquiry Number	2013-5-14-5:11	Item Number	

Performance of One Unit: AP22 PN: BY5434 **Units Connected in Parallel:** 1

Fluid Name	Water		Water	
Total Flow	232.57	GPM	230.93	GPM
Inlet Temperature	135.00	°F	85.00	°F
Outlet Temperature	115.00	°F	105.00	°F
Operating Pressure	0.00	PSIG	0.00	PSIG
Pressure Drop, Allow./Calc	5.00/3.67	PSIG	5.00/3.65	PSIG
Density	61.59	lb/ft3	61.99	lb/ft3
Viscosity	0.56	cp	0.76	cp
Specific Heat	1.00	Btu/lbm,°F	1.00	Btu/lbm,°F
Thermal Conductivity	0.37	Btu/ft,h,°F	0.36	Btu/ft,h,°F
Specified Fouling Factor	0.00000	hr,ft2,°F/Btu	0.00000	hr,ft2,°F/Btu

Total Heat Exchanged	2,300,000.00	Btu/h
LMTD	30.00	°F
Overall Heat Transfer Coefficient, Clean/Dirty	898.94/898.94	Btu/hr,ft2,°F
Overall Heat Transfer Coefficient, Service	883.28	Btu/hr,ft2,°F
Effective Surface Area	86.76	ft2
Excess Surface	1.77	%

Construction

Number of Passes * Channels	1*16	1*16
Total Number of Plates	33	
Pressure, Design/Test	150/195(PSIG)	150/195(PSIG)
Design Temperature, min/max	32/284(°F)	32/284(°F)
Internal Volume	0.42(ft3)	0.42(ft3)
Inlet Connection(Location)	F1, 316SS lined studded port for 150# ansi flange 4.00 "	F3, 316SS lined studded port for 150# ansi flange 4.00 "
Outlet Connection(Location)	F4, 316SS lined studded port for 150# ansi flange 4.00 "	F2, 316SS lined studded port for 150# ansi flange 4.00 "

Plate Material	304
Plate Thickness	0.40 mm
Plate Mix	TK
Gasket Material	NITRILE HT
Empty/Flooded Weight	967 / 1,020 lb
Frame Size / Max. Frame Capacity	23.62 inch / 54 plates
Approvals	ASME Sect VIII Div 1 w/U stamp.
Notes	This heat exchanger is certified by the AHRI Liquid to Liquid heat exchangers certification program based on AHRI Standard 400. AHRI certified units are subject to rigorous and continuous testing, have performance ratings independently measured and are third party verified. Certified units may be found in the AHRI directory at www.ahridirectory.org.

Note: Customer to verify fluid/material compatibility.

Performance evaluation is dependent on customers' ability to provide sufficiently accurate measurements.

REV NO.	REVISION NOTE	REV BY	REV DATE

NOTE(s): 1. Dimensions shown in inches (in.)

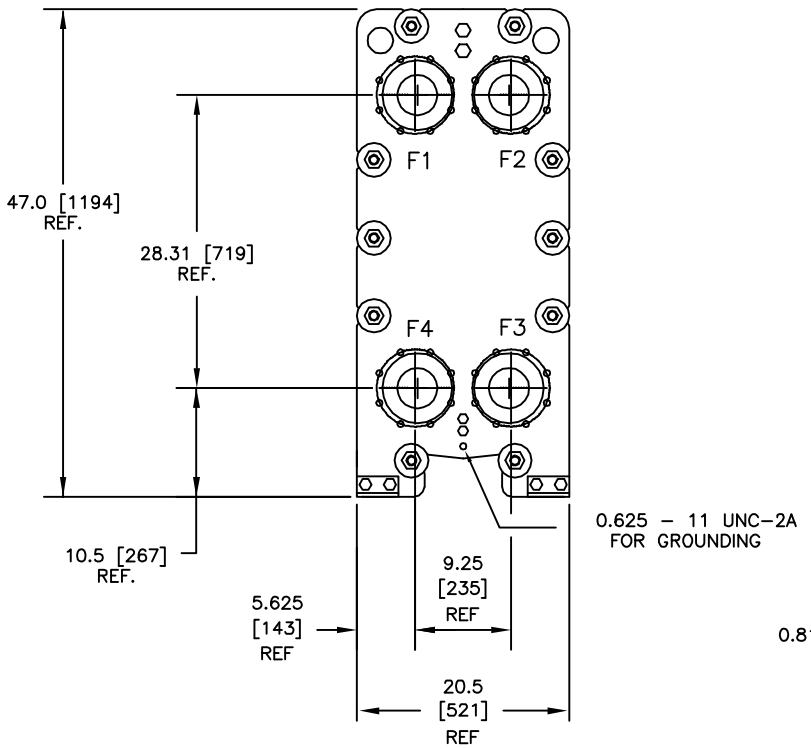

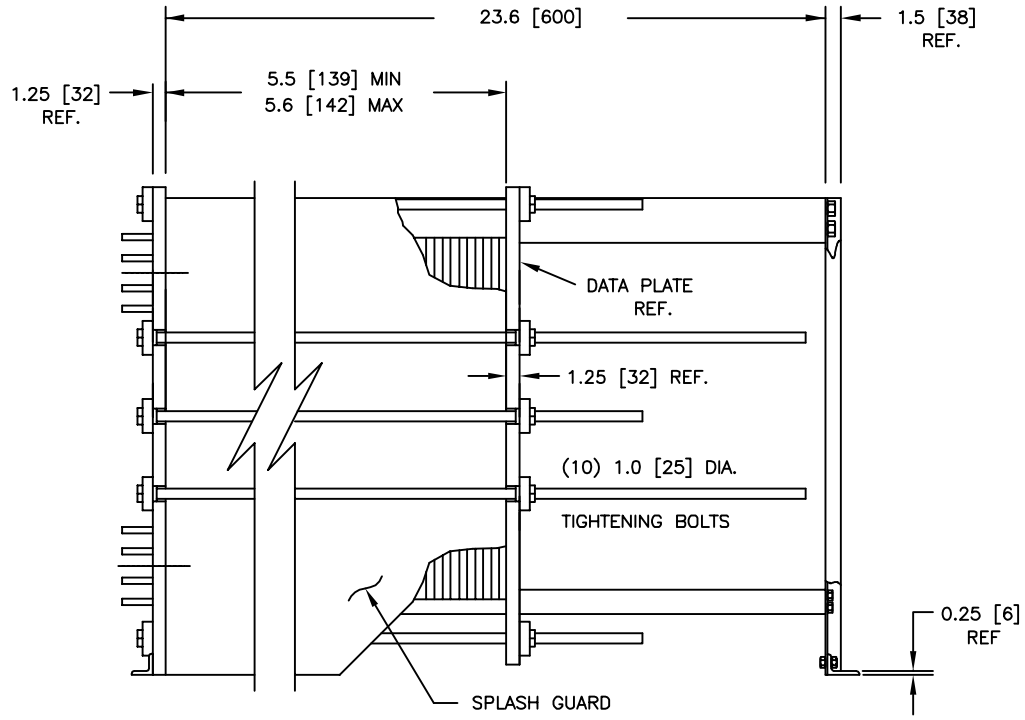

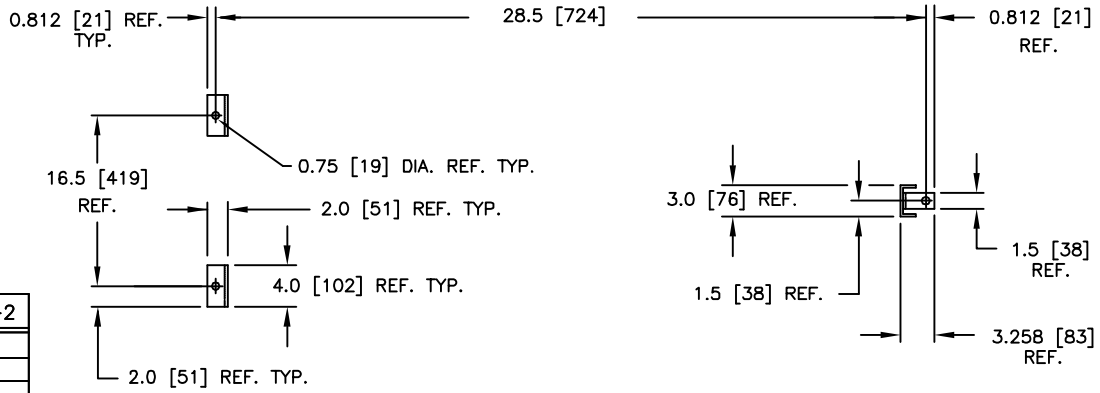

EST. WEIGHT (LBS): 967 DRY / 1020 WET

UNIT CONSTRUCTION – ASME CODE	
THERMAL PLATES:	0.4mm / 304
GASKET TYPE:	NITRILE HT
PLATE MIXTURE:	TK
MIX (SIDE 1):	1 x 16
MIX (SIDE 2):	1 x 16
PLATE QUANTITY:	33 / 54 MAX
CARRY BAR LGTH:	600mm
CARRY BAR MTL:	ALUM, S/S PROFILE
TIE BOLTS:	ZINC PLATED CARBON
SPLASH GUARD:	ALUMINUM

DESIGN CONDITIONS:	SIDE–1	SIDE–2
DSGN PRESS. (PSIG)	150.0	150.0
TEST PRESS. (PSIG)	195.0	195.0
DSGN TEMP. (°F)	284	284
MIN. TEMP. (°F)	32	32

PORT IDENTIFICATION		CONNECTION – TYPE AND DESCRIPTION
F1	SIDE–1 IN	4" PORT, STUDDED FOR 150# ANSI FLANGE, w/ 316SS LINER
F4	SIDE–1 OUT	4" PORT, STUDDED FOR 150# ANSI FLANGE, w/ 316SS LINER
F3	SIDE–2 IN	4" PORT, STUDDED FOR 150# ANSI FLANGE, w/ 316SS LINER
F2	SIDE–2 OUT	4" PORT, STUDDED FOR 150# ANSI FLANGE, w/ 316SS LINER

This document contains material and/or information which is the property of Xylem Inc., and supplied only on a confidential basis. No transmittal or disclosure shall be made to any person, firm, or corporation without prior written approval of Xylem Inc..

MADE:	ITT	07/27/17
CHK:	HT	07/27/17

ORDER NO.: NA

Bell & Gossett
Buffalo, NY 14227 USA

MODEL AP22

2013–5–14–5:11 –00

REV.

Product Catalog

Packaged Rooftop Air Conditioners
Precedent™ — Heat Pump
3 to 10 Tons — 60 Hz

August 2016

PKGP-PRC013M-EN

General Data

Table 1. General data - 3 to 4 tons - standard efficiency

	3 Tons	4 Tons	5 Tons
	WSC036H3,4,W	**WSC048H3,4,W**	**WSC060H3,4,W**
Cooling Performance[a]			
Gross Cooling Capacity	39,500	50,000	61,000
EER/SEER[b]	12.0/14.0	12.0/14.0	12.0/14.0
Nominal cfm/AHRI Rated cfm	1,200/1,200	1,600/1,600	2,000/2,000
AHRI Net Cooling Capacity	39,000	49,000	60,000
System Power (kW)	3.25	4.08	5.00
Heating Performance[c]			
High Temp. Btuh Rating	36,000	47,500	59,000
System Power kW/COP	3.01/3.50	3.98/3.50	4.94/3.50
Low Temp. Btuh Rating	20,600	26,000	35,000
System Power kW/COP	2.74/2.20	3.31/2.30	4.46/2.30
HSPF (Btu/Watts-hr)	8.00	8.20	8.20
Compressor			
Number/Type	1/Scroll	1/Scroll	1/Scroll
Sound			
Outdoor Sound Rating (dB)[d]	79	80	87
Outdoor Coil - Type	Lanced	Lanced	Lanced
Tube Size (in.)	0.3125	0.3125	0.3125
Face Area (sq. ft.)	12.33	12.33	17.00
Rows/FPI	2/16	3/16	3/16
Refrigerant Control	Thermal Expansion Valve	Thermal Expansion Valve	Thermal Expansion Valve
Indoor Coil - Type	Lanced	Lanced	Lanced
Tube Size (in.)	0.3125	0.3125	0.3125
Face Area (sq. ft.)	8.74	8.74	9.27
Rows/FPI	3/16	3/16	3/16
Refrigerant Control	Thermal Expansion Valve	Thermal Expansion Valve	Thermal Expansion Valve
Drain Connection Number/Size (in.)	1¾ NPT	1¾ NPT	1¾ NPT
Outdoor Fan - Type	Propeller	Propeller	Propeller
Number Used/Diameter (in.)	1/22	1/22	1/26
Drive Type/No. Speeds	Direct/1	Direct/1	Direct/1
cfm	3,600	4,050	5,130
Motor hp	0.25	0.33	0.40
Motor rpm	1,100	1,100	1,100
Indoor Fan - Type (Standard)	FC Centrifugal	FC Centrifugal	FC Centrifugal
Number Used/Diameter (in.)/Width (in.)	1/11x11	1/11x11	1/11x11
Drive Type/No. Speeds/rpm	Direct/5[e]	Direct/5[e]	Direct/5[e]
Motor hp (standard/oversized)	0.75/1.5	1.0/1.5	1.0/1.5
Motor Frame Size (standard/oversized)	48/48	48/48	48/48
Filters[f] - Type Furnished	Throwaway	Throwaway	Throwaway
Number Size Recommended	(2) 20x35x2	(2) 20x35x2	(4) 16x25x2

continued on next page

Table 1. General data - 3 to 4 tons - standard efficiency (continued)

	3 Tons	4 Tons	5 Tons
	WSC036H3,4,W	WSC048H3,4,W	WSC060H3,4,W
Refrigerant Charge[g]			
Pounds of R-410A	7.7	9.3	11.5

(a) Cooling performance is rated at 95°F ambient, 80°F entering dry bulb, 67°F entering wet bulb. Gross capacity does not include the effect of fan motor heat. AHRI capacity is net and includes the effect of fan motor heat. Units are suitable for operation to ±20% of nominal cfm. Units are certified in accordance with the Unitary Air-Conditioner Equipment certification program, which is based on AHRI Standard 210/240.
(b) EER and/or SEER are rated at AHRI conditions and in accordance with DOE test procedures.
(c) Heating performance is rated at 47°F ambient with 43°F wet bulb, 70°F entering dry bulb, 60°F entering wet bulb. High Temp. Btuh Rating includes the effect of fan motor heat. Units are suitable for operation to ±20% of nominal cfm. Units are certified in accordance with the Unitary Air-Conditioner Equipment certification program, which is based on AHRI Standard 210/240.
(d) Outdoor Sound Rating shown is tested in accordance with AHRI Standard 270. For additional information reference the outdoor sound power level data in the performance section.
(e) For multispeed direct drive rpm values, reference the direct drive, evaporator fan performance table.
(f) Optional 2" MERV 8 and MERV 13 filters also available.
(g) Refrigerant charge is an approximate value. For a more precise value, see unit nameplate and service instructions.

Table 2. General data - 6 to 10 tons - standard efficiency

	6 Tons	7.5 Tons	10 Tons
	WSC072E3,4,W	WSC090E3,4,W	WSC120E3,4,W
Cooling Performance[a]			
Gross Cooling Capacity	78,000	94,000	126,000
EER[b]	11.4	11.1	11.2
Nominal cfm/AHRI Rated cfm	2,400/2,100	3,000/2,625	4,000/3,200
AHRI Net Cooling Capacity	75,000	89,000	118,000
IEER[c]	13.0	12.2	13.1
System Power (kW)	6.58	8.02	10.54
Heating Performance[d]			
High Temp. Btuh Rating	71,000	86,000	111,000
System Power kW/COP	5.95/3.50	7.41/3.40	9.04/3.60
Low Temp. Btuh Rating	39,000	48,000	69,000
System Power kW/COP	5.2/2.30	6.39/2.30	8.43/2.40
HSPF (Btu/Watts-hr)	—	—	—
Compressor			
Number/Type	1/Scroll	1/Scroll	2/Scroll
Sound			
Outdoor Sound Rating (dB)[e]	89	89	87
Outdoor Coil - Type	Lanced	Lanced	Lanced
Configuration	Full Face	Full Face	Intertwined
Tube Size (in.)	0.3125	0.3125	0.3125
Face Area (sq. ft.)	17.00	19.83	25.56
Rows/FPI	3/16	3/16	3/16
Refrigerant Control	Thermal Expansion Valve	Thermal Expansion Valve	Thermal Expansion Valve
Indoor Coil - Type	Lanced	Lanced	Lanced
Configuration	Full Face	Full Face	Intertwined
Tube Size (in.)	0.3125	0.3125	0.3125
Face Area (sq. ft.)	9.89	12.36	16.65
Rows/FPI	4/16	3/16	4/16
Refrigerant Control	Orifice	Orifice	Orifice
Drain Connection Number/Size (in.)	1 3/4 NPT	1 3/4 NPT	1 3/4 NPT

continued on next page

Table 2. General data - 6 to 10 tons - standard efficiency (continued)

	6 Tons	7.5 Tons	10 Tons
	WSC072E3,4,W	**WSC090E3,4,W**	**WSC120E3,4,W**
Outdoor Fan - Type	Propeller	Propeller	Propeller
Number Used/Diameter (in.) Drive Type/No. Speeds cfm Motor hp Motor rpm	1/26 Direct/1 5,800 0.70 1,100	1/26 Direct/1 6,200 0.75 1,100	1/30 Direct/1 6,900 0.75 1,100
Indoor Fan - Type	FC Centrifugal	FC Centrifugal	BC Plenum
Number Used/Diameter (in.)/Width (in.) Drive Type/No. Speeds/rpm Motor hp (Standard/Oversized) Motor Frame Size (Standard/Oversized)	1/12x12 Belt/Variable/1,750 1.0/2.0 56/56	1/15 x 15 Belt/Variable/1,750 1.0/3.0 56/56	1/19.7 x 15 Direct/Variable[f] 3.75/— —/—
Filters[g] - Type Furnished	Throwaway	Throwaway	Throwaway
Number Size Recommended	(4) 16x25x2	(4) 20x25x2	(3) 20x25x2 (2) 20x30x2
Refrigerant Charge[h]			
Pounds of R-410A	12.00	13.80	9.75/9.31

(a) Cooling performance is rated at 95°F ambient, 80°F entering dry bulb, 67°F entering wet bulb. Gross capacity does not include the effect of fan motor heat. AHRI capacity is net and includes the effect of fan motor heat. Units are suitable for operation to ±20% of nominal cfm. Units are certified in accordance with the Unitary Air-Conditioner Equipment certification program, which is based on AHRI Standard 340/360.
(b) EER and/or SEER are rated at AHRI conditions and in accordance with DOE test procedures.
(c) Integrated Efficiency Ratio (IEER) is rated in accordance with AHRI Standard 340/360. The IEER rating requires that the unit efficiency be determined at 100%, 75%, 50% and 25% load (net capacity) at the specified in AHRI Standard.
(d) Heating performance is rated at 47°F ambient with 43°F wet bulb, 70°F entering dry bulb, 60°F entering wet bulb. High Temp. Btuh Rating includes the effect of fan motor heat. Units are suitable for operation to ±20% of nominal cfm. Units are certified in accordance with the Unitary Air-Conditioner Equipment certification program, which is based on AHRI Standard 340/360.
(e) Outdoor Sound Rating shown is tested in accordance with AHRI Standard 270. For additional information reference the outdoor sound power level data in the performance section.
(f) For multispeed direct drive rpm values, reference the direct drive, evaporator fan performance table.
(g) Optional 2” MERV 8 and MERV 13 filters also available.
(h) Refrigerant charge is an approximate value. For a more precise value, see unit nameplate and service instructions.

Split System Heat Pump Product Data

XR14 4TWR4

1 1/2 - 5 Tons

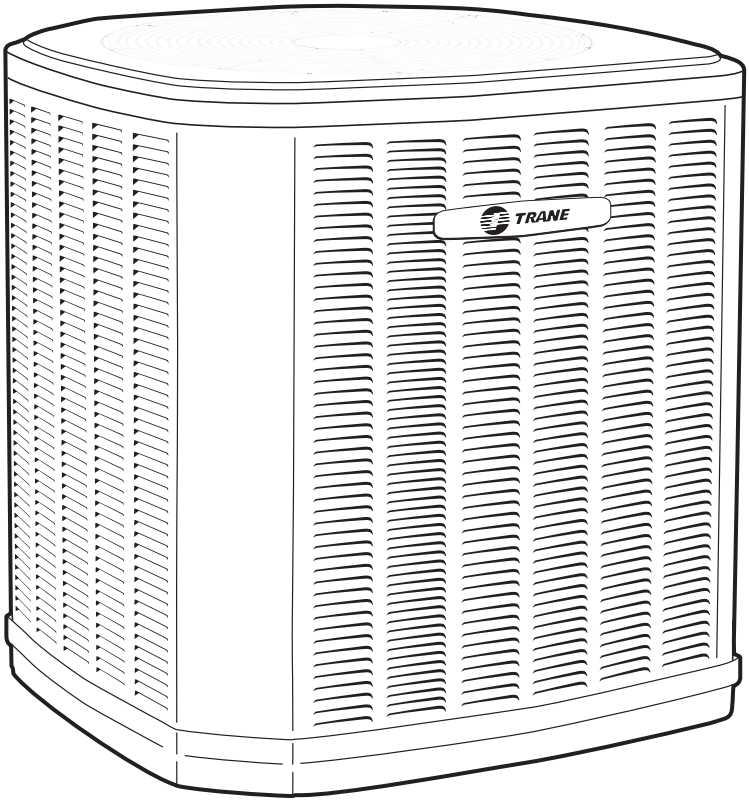

PUB. NO. 22-1765-09

Contents

Features and Benefits 2

Model Nomenclature 3

General Data 4

- Product Specifications 4
- A-weighted Sound Power Level [dB(A)] 4
- Accessory Description and Usage 5
- AHRI Standard Capacity Rating Conditions 5

Electrical Data 6

Dimensions 11

Mechanical Specification Options 12

Features and Benefits

- Efficiency up to **14.5 SEER** and **8.5 HSPF**
- All aluminum **SPINE FIN™** coil
- **WEATHERGUARD™** fasteners
- **QUICK-SESS™** cabinet, service access and refrigerant connections with full coil protection
- **DURATUFF™** base, fast complete drain, weatherproof
- **COMFORT-R™** mode approved
- Glossy corrosion resistant finish
- Internal compressor high/low pressure & temperature protection
- 018–030 ship with start kit
- Compressor Sump Heat (060)
- Liquid line filter/drier
- Tarpaulin gray cabinet with anthracite gray badge
- High pressure switch
- Demand Defrost with Diagnostics
- R-410A refrigerant
- S.E.E.T. design testing
- 100% line run test
- Low ambient cooling to 20°F with AY28X084
- Low ambient cooling to 55°F as shipped

- **Extended warranties available**

Model Nomenclature

Outdoor Units

4 T W R 4 0 3 6 D 1 0 0 0 A A

Refrigerant Type
2 = R-22
4 = R-410A

TRANE

Product Type
W = Split Heat Pump
T = Split Cooling

Product Family
Z = Leadership – Two Stage
X = Leadership
R = Replacement/Retail
B = Basic
A = Light Commercial

Family SEER

0 = 10	3 = 13	6 = 16
1 = 11	4 = 14	8 = 18
2 = 12	5 = 15	9 = 19

Split System Connections 1-6 Tons
0 = Brazed

Nominal Capacity in 000s of BTUs

Major Design Modifications

Power Supply
1 = 200-230/1/60 or 208-230/1/60
3 = 200-230/3/60
4 = 460/3/60

Secondary Function

Minor Design Modifications

Unit Parts Identifier

Air Handler

1 2 3 4 5 6 7 8 9 10 11 12 13 14 15
G A M 5 A 0 B 3 6 M 3 1 S A A

Brand
T = Better
G = Good

Product Type
A = Air Handler

Convertability
M = Multi-poise 4-way
F = Upflow Front Return, 3-way
T = 3-way

Product Tier
2 = Good, Entry Level Feature Set
4 = Better, Retail Replacement Mid Effy.
5 = Better, Entry Level High Effy., Multi-Speed
7 = Best, Retail Replacement High Effy., Variable-Speed
8 = Best, Retail Ultimate High Effy., Variable-Speed

Major Design Change

No Descriptor
0 = Air Handler / Coil

Size (Footprint)
A = 17.5 x 21.5
B = 21.0 x 21.5
C = 23.5 x 21.5

Cooling Size: Air Handler or Coil
0-9 = AH Coil - 1000 BTU's (18, 24, 30, 36, 42, 48, 60)

Airflow Type & Capability
S = Low Effy PSC, 1-5 - nom. Tonnage (cfm/ton)
M = Mid Effy Multi-Speed, 1-5 - nom. Tonnage (cfm/ton)
H = High Effy Multi-Speed, 1-5 - nom. Tonnage (cfm/ton)
V = High Effy Variable, 1-5 - nom. Tonnage (cfm/ton)

Power Supply
1 = 208-230/1/60

System Control Type
S = Standard - 24 VAC
C = CLII 13.8 VDC

Minor Design Change

Unit Parts Identifier

Gas Furnaces

1 2 3 4 5 6 7 8 9 10 11 12 13 14 15
T U D 1 B 0 8 0 A 9 H 3 1 A A

Furnace Configuration
TU = Upflow/Horizontal
TD = Downflow/Horizontal

Type
E = 80% Induced Draft Standard
D = 80% Induced Draft Premium
C = 90% Condensing Standard
X = 90% Condensing Premium
H = 95% Condensing Premium

Number of Heating Stages
1 = Single Stage
2 = Two Stage
M = Modulating

Cabinet Width
A = 14.5" Cabinet Width
B = 17.5" Cabinet Width
C = 21.0" Cabinet Width
D = 24.5" Cabinet Width

Heating Input in 1000's (BTUH)
080 = 80,000 BTUH

Major Design Change

Voltage
9 = 115 Volts / 60 Hertz / Natural Gas
A = 115 Volts / 50 Hertz / Natural Gas
C = 115 Volts / Natural Gas with Communicating System Control
F = 115 Volts / Natural Gas with Integrated Electronic Filter
D = 115 Volts / Natural Gas with Communicating System Control and Integrated Electronic Filter

Air Capacity for Cooling

Standard PSC	Variable Speed	High Efficiency
24 = 2 Tons	V3 = 3 Tons	H3 = 3 Tons
36 = 3 Tons	V4 = 4 Tons	H4 = 4 Tons
42 = 3.5 Tons	V5 = 5 Tons	H5 = 5 Tons
45 = 4 Tons		
48 = 4 Tons		
54 = 5 Tons		
60 = 5 Tons		
72 = 6 Tons		

Draft Inducer Speeds
1 = Single Speed
2 = Two Speed
V = Variable Speed

Minor Design Change

Service Digit - Not Orderable

Heat Pump/ Cooling Coils

1 2 3 4 5 6 7 8 9 10 11 12 13 14 15
4 T X C B 0 3 6 A C 3 H C A A

Refrigerant Type
4 = R-410A

Series
T = Premium (Heat Pump or Convertible Coil)
C = Standard (Cooling Only)

Coil Design
X = Direct Expansion Evaporator Coil

Coil Feature
C = Cased A Coil
A = Uncased A Coil
F = Cased Horizontal Flat Coil

Coil Width (Cased/Uncased)
A = 14.5" /13.3"
B = 17.5" / 16.3"
C = 21.0" / 19.8"
D = 24.5" / 23.3"
H = 10.5"

Refrigerant Line Coupling
0 = Brazed

Nominal Capacity in 1000's (BTUH)

Major Design Change

Efficiency
C = Standard
S = Hi Efficiency (derived from 10 SEER products)

Refrigerant Control
3 = TXV - Non-Bleed

Coil Circuitry
H = Heat Pump
C = Cooling

Airflow Configuration
A = Upflow Only
U = Upflow / Downflow
H = Horizontal Only
C = Convertible - Upflow, Downflow, Left or Right Airflow

Minor Design Change

Service Digit - Not Orderable

General Data

Product Specifications

Model No. ①	4TWR4018D1000A	4TWR4024D1000A	4TWR4030D1000A	4TWR4036D1000A
Electrical Data V/Ph/Hz ②	208/230/1/60	208/230/1/60	208/230/1/60	208/230/1/60
Min Cir Ampacity	9	11	15	22
Max Fuse Size (Amps)	15	15	25	35
Compressors	CLIMATUFF®	CLIMATUFF®	CLIMATUFF®	CLIMATUFF® - SCROLL
RL AMPS - LR AMPS	6.4 - 38.6	8.3 - 58	11.3 - 68.2	16.7 - 79
Outdoor Fan FL Amps	0.77	0.77	1.20	0.95
Fan HP	1/8	1/8	1/5	1/5
Fan Dia (inches)	24	24	22	22
Coil	Spine Fin™	Spine Fin™	Spine Fin™	Spine Fin™
Refrigerant R-410A	5/14-LB/OZ	7/02-LB/OZ	8/02-LB/OZ	6/2-LB/OZ
Line Size - (in.) O.D. Gas ③	5/8	5/8	3/4	3/4
Line Size - (in.) O.D. Liquid ③	3/8	3/8	3/8	3/8
Dimensions H x W x D (Crated)	34 x 30.1 x 33	38 x 30.1 x 33	38.4 x 35.1 x 38.7	38.4 x 35.1 x 38.7
Weight - Shipping	204	236	273	229
Weight - Net	176	208	239	198
Start Components	YES	YES	YES	NO
Sound Enclosure	NO	NO	YES	NO
Compressor Sump Heat	NO	NO	NO	NO
Optional Accessories: ④				
Anti-short Cycle Timer	TAYASCT501A	TAYASCT501A	TAYASCT501A	TAYASCT501A
Evaporator Defrost Control A/C	AY28X084	AY28X084	AY28X084	AY28X084
Rubber Isolator Kit	BAYISLT101	BAYISLT101	BAYISLT101	BAYISLT101
Crankcase Heater	BAYCCHT300A	BAYCCHT300A	BAYCCHT300A	BAYCCHT302A
Hard Start Kit Scroll	—	—	—	BAYKSKT263
Extreme Condition Mounting Kit	BAYECMT023	BAYECMT023	BAYECMT004	BAYECMT004
Snow Leg - Base & Cap 4" High	BAYLEGS002	BAYLEGS002	BAYLEGS002	BAYLEGS002
Snow Leg - 4" Extension	BAYLEGS003	BAYLEGS003	BAYLEGS003	BAYLEGS003
Sound Enclosure	BAYSDEN001	BAYSDEN001	—	BAYDENS003
Seacoast Kit	BAYSEAC001	BAYSEAC001	BAYSEAC001	BAYSEAC001
Refrigerant Lineset ⑤	TAYREFLN950	TAYREFLN950	TAYREFLN7*	TAYREFLN7*
Service Valve Cover	TAYSVPANL0032A	TAYSVPANL3343A	TAYSVPANL3343A	TAYSVPANL3343A

① Certified in accordance with the Air-Source Unitary Heat Pump Equipment certification program which is based on AHRI Standard 210/240.
② Calculated in accordance with N.E.C. Only use HACR circuit breakers or fuses.
③ Standard line lengths - 80'. Standard lift - 60' Suction and Liquid line. For Greater lengths and lifts refer to refrigerant piping software Pub# 32-3312-0†. (†denotes latest revision)
④ For accessory description and usage, see page 5. ⑤ * = 15, 20, 25, 30, 40 and 50 foot lineset available.

Sound Power Level

Model	A-Weighted Sound Power Level [dB(A)]	Full Octave Sound Power [dB]							
		63 Hz	125 Hz	250 Hz	500 Hz	1000 Hz	2000 Hz	4000 Hz	8000 Hz
4TWR4018D	76	73	75	70	74	72	67	60	50
4TWR4024D	76	73	75	70	74	72	67	60	50
4TWR4030D	76	75	71	67	69	67	63	59	55
4TWR4036D	76	84	75	70	72	67	62	57	50
4TWR4042D	76	83	74	68	71	68	63	59	55
4TWR4048D	76	83	72	67	70	69	65	59	56
4TWR4060D	76	71	71	76	76	74	69	62	55

Note: Rated in accordance with AHRI Standard 270-2008

General Data

Product Specifications

Model No. ①	4TWR4042D1000A	4TWR4048D1000A	4TWR4060D1000A
Electrical Data V/Ph/Hz ②	208/230/1/60	208/230/1/60	208/230/1/60
Min Cir Ampacity	26	28	34
Max Fuse Size (Amps)	45	50	60
Compressors	CLIMATUFF® - SCROLL	CLIMATUFF® - SCROLL	CLIMATUFF® - SCROLL
RL AMPS - LR AMPS	19.9 - 109	21.8 - 117	26.4 - 134
Outdoor Fan FL Amps	0.86	0.86	1.30
Fan HP	1/5	1/5	1/4
Fan Dia (inches)	22	24.71	29.15
Coil	Spine Fin™	Spine Fin™	Spine Fin™
Refrigerant R-410A	7/8-LB/OZ	8/8-LB/OZ	13/12-LB/OZ
Line Size - (in.) O.D. Gas ③	3/4	7/8	1 - 1/8
Line Size - (in.) O.D. Liquid ③	3/8	3/8	3/8
Dimensions H x W x D (Crated)	38.4 x 35.1 x 38.7	42.4 x 35.1 x 38.7	51 x 35.1 x 38.7
Weight - Shipping	253	269	332
Weight - Net	219	234	295
Start Components	NO	NO	NO
Sound Enclosure	NO	NO	NO
Compressor Sump Heat	NO	NO	YES
Optional Accessories: ④			
Anti-short Cycle Timer	TAYASCT501A	TAYASCT501A	TAYASCT501A
Evaporator Defrost Control A/C	AY28X084	AY28X084	AY28X084
Rubber Isolator Kit	BAYISLT101	BAYISLT101	BAYISLT101
Crankcase Heater	BAYCCHT301A	BAYCCHT301A	—
Hard Start Kit Scroll	BAYKSKT263	BAYKSKT263	BAYKSKT263
Extreme Condition Mounting Kit	BAYECMT004	BAYECMT004	BAYECMT004
Snow Leg - Base & Cap 4" High	BAYLEGS002	BAYLEGS002	BAYLEGS002
Snow Leg - 4" Extension	BAYLEGS003	BAYLEGS003	BAYLEGS003
Sound Enclosure	BAYSDEN004	BAYSDEN004	BAYSDEN004
Seacoast Kit	BAYSEAC001	BAYSEAC001	BAYSEAC001
Refrigerant Lineset ⑤	TAYREFLN7*	TAYREFLN3*	TAYREFLN3*
Service Valve Cover	TAYSVPANL3343A	TAYSVPANL0044A	TAYSVPANL0046A

① Certified in accordance with the Air-Source Unitary Heat Pump Equipment certification program which is based on AHRI Standard 210/240.
② Calculated in accordance with N.E.C. Only use HACR circuit breakers or fuses.
③ Standard line lengths - 60'. Standard lift - 60' Suction and Liquid line. For Greater lengths/lifts refer to refrigerant piping software Pub# 32-3312-0†.
④ For accessory description and usage, see page 5. ⑤ * = 25, 30, 40 and 50 foot lineset available.

Accessory Description and Usage

Anti-Short Cycle Timer — Solid state timing device that prevents compressor recycling until 5 minutes have elapsed after satisfying call or power interruptions. Use in area with questionable power delivery, commercial applications, long lineset, etc.

Evaporator Defrost Control — SPST Temperature actuated switch that cycles the condenser off as indoor coil reaches freeze-up conditions. Used for low ambient cooling to 30°F with TXV.

Rubber Isolators — 5 large rubber donuts to isolate condensing unit from transmitting energy into mounting frame or pad. Use on any application where sound transmission needs to be minimized.

Hard Start kit — Start capacitor and relay to assist compressor motor startup. Use in areas with marginal power supply, on long linesets, low ambient conditions, etc.

Extreme Condition Mount Kit — Bracket kits to securely mount condensing unit to a frame or pad without removing any panels. Use in areas with high winds, or on commercial roof tops, etc.

AHRI Standard Capacity Rating Conditions

AHRI STANDARD 210/240 RATING CONDITIONS —

(A) Cooling 80°F DB, 67°F WB air entering indoor coil, 95°F DB air entering outdoor coil.

AHRI STANDARD 270 RATING CONDITIONS — (Noise rating numbers are determined with the unit in cooling operation.) Standard Noise Rating number is at 95°F outdoor air.

Split System Heat Pump Product Data

XR17
4TWR7

2, 3, 4 & 5 Tons

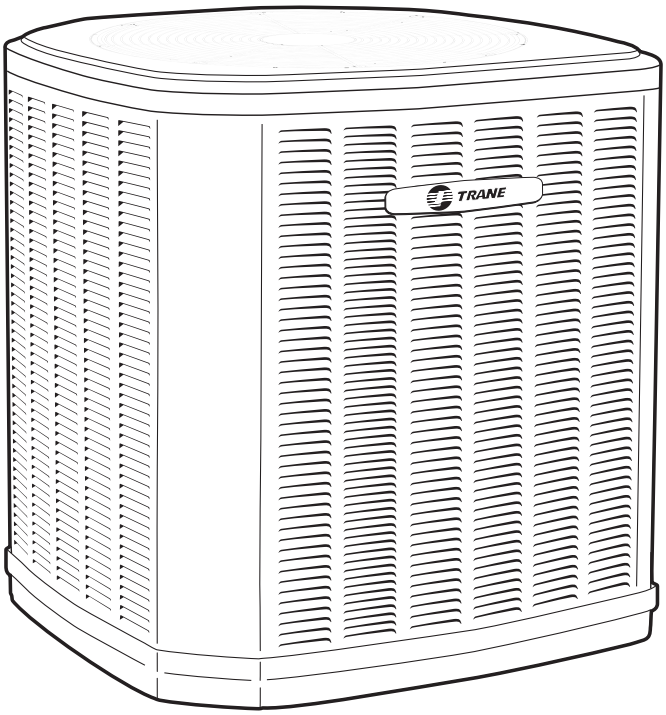

PUB. NO. 22-1886-02

Features and Benefits

- **CLIMATUFF**™ 2-stage scroll compressor
- Efficiency up to **18.0 SEER** and **9.5 HSPF**
- All Aluminum **SPINE FIN**™ coil
- **DURATUFF**™ weather proof and rust proof base
- **COMFORT "R"**™ mode approved for better comfort indoors
- **QUICK-SESS**™ cabinet, service access and refrigerant connections with full coil protection
- **WEATHERGUARD**™ fasteners
- Glossy corrosion resistant finish tarpaulin gray cabinet with anthracite gray top
- Internal compressor high/low pressure & temperature protection
- Liquid line filter/drier
- Low sound with advanced PSC fan motor
- Service valve cover
- R-410A refrigerant
- From 70 to 100% capacity modulation
- 100% run test in the factory
- Low ambient cooling to 55° as shipped

- **Extended warranties available**

Contents

Features and Benefits 2

General Data 4

Product Specifications 4

A-weighted Sound Power Level [dB(A)] 4

Accessory Description and Usage 5

AHRI Standard Capacity Rating Conditions 5

Model Nomenclature 6

Electrical Data 7

Dimensions 10

Mechanical Specifications 11

General Data

Product Specifications

Model No. ①	4TWR7024A1000A	4TWR7036B1000A	4TWR7048A1000A	4TWR7060A1000A
Electrical Data V/Ph/Hz ②	208/230/1/60	208/230/1/60	208/230/1/60	208/230/1/60
Min Cir Ampacity	15	21	28	37
Max Fuse Size (Amps)	25	35	45	60
Compressor	CLIMATUFF® - SCROLL	CLIMATUFF® - SCROLL	CLIMATUFF® - SCROLL	CLIMATUFF® - SCROLL
No. Compress. – No. Stages	1 -2	1-2	1-2	1-2
RL AMPS - LR AMPS	11.7 - 58.3	15.3 - 83	21.2 - 104	28.8 - 152.9
Outdoor Fan FL Amps	0.74	0.74	1.00	1.30
Fan HP	1/8	1/8	1/5	1/4
Fan Dia (inches)	27.6	27.87	27.6	27.6
Coil	Spine Fin™	Spine Fin™	Spine Fin™	Spine Fin™
Refrigerant R-410A	10/3-LB/OZ	9/0-LB/OZ	12/9-LB/OZ	13/3-LB/OZ
Line Size - (in.) O.D. Gas ③	5/8	3/4	7/8	1-1/8
Line Size - (in.) O.D. Liquid ③	3/8	3/8	3/8	3/8
Dimensions H x W x D (Crated)	46.4 x 35.1 x 38.7	46.4 X 35.1 X 38.7	51.0 x 35.1 x 38.7	51.0 x 35.1 x 38.7
Weight - Shipping	272	258	329	330
Weight - Net	236	210	292	293
Start Components	NO	NO	NO	NO
Sound Enclosure	NO	NO	NO	NO
Compressor Sump Heat	YES	YES	YES	YES
Optional Accessories: ④				
Rubber Isolator Kit	BAYISLT101	BAYISLT101	BAYISLT101	BAYISLT101
Snow Leg - Base & Cap 4" High	BAYLEGS002	BAYLEGS002	BAYLEGS002	BAYLEGS002
Snow Leg - 4" Extension	BAYLEGS003	BAYLEGS003	BAYLEGS003	BAYLEGS003
Hard Start Kit Scroll	BAYKSKT260	BAYKSKT260	BAYKSKT263	BAYKSKT263
Extreme Condition Mounting Kit	BAYECMT004	BAYECMT004	BAYECMT004	BAYECMT004
Vertical Discharge Air Kit Base 4	BAYVDTA003	BAYVDTA004	BAYVDTA004	BAYVDTA004
Auto Charge Solenoid Kit	BAYCAKT001	BAYCAKT001	BAYCAKT001	BAYCAKT001
Refrigerant Lineset ⑤	TAYREFLN9*	TAYREFLN7*	TAYREFLN3*	TAYREFLN4*

① Certified in accordance with the Air-Source Unitary Heat Pump Equipment certification program which is based on AHRI Standard 210/240.
② Calculated in accordance with N.E.C. Only use HACR circuit breakers or fuses.
③ Standard line lengths - 60'. Standard lift - 25' Suction and Liquid line.
For Greater lengths and lifts refer to refrigerant piping software Pub# 32-3312-0†. (†denotes latest revision)
④ For accessory description and usage, see page 5.
⑤ * = 15, 20, 25, 30, 40 and 50 foot lineset available.

Sound Power Level

Model	A-Weighted Sound Power Level [dB(A)]	Full Octave Sound Power [dB]							
		63 Hz	125 Hz	250 Hz	500 Hz	1000 Hz	2000 Hz	4000 Hz	8000 Hz
4TWR7024A1	72	67	67	62	63	62	57	55	50
4TWR7036B1	72	66	66	64	64	63	57	54	48
4TWR7048A1	72	68	73	65	67	63	56	53	47
4TWR7060A1	74	58	75	66	68	66	59	55	52

Note: Rated in accordance with AHRI Standard 270-2008

General Data

Accessory Description and Usage

Rubber Isolators — 5 rubber donuts to isolate condensing unit from mounting frame or pad. Use on any application where sound transmission needs to be minimized.

Extreme Conditions Mounting Kit — Bracket kits to securely mount condensing unit to a frame or pad without removing any panels. Use in areas with high winds, or on commercial rooftops, etc.

Low Ambient Cooling — For low ambient cooling below 55° see Application Guide APP-APG013-EN.

AHRI Standard Capacity Rating Conditions

AHRI STANDARD 210/240 RATING CONDITIONS —

(A) Cooling 80°F DB, 67°F WB air entering indoor coil, 95°F DB air entering outdoor coil.

(B) High Temperature Heating 47°F DB, 43°F WB air entering outdoor coil, 70°F DB air entering indoor coil.

(C) Low Temperature Heating 17°F DB, 15°F WB air entering outdoor coil, 70°F DB air entering indoor coil.

(D) Rated indoor airflow for heating is the same as for cooling.

AHRI STANDARD 270 RATING CONDITIONS — (Noise rating numbers are determined with the unit in cooling operation.) Standard Noise Rating number is at 95°F outdoor air.

AHRI CERTIFIED™
www.ahridirectory.org
Unitary Small HP
AHRI Standard 210/240
Certification applies only when the complete system is listed with AHRI.

C ETL LISTED US
Intertek

Model Nomenclature

Outdoor Units

4 T W R 7 0 3 6 A 1 0 0 0 A A

Refrigerant Type
4 = R-410A

TRANE

Product Type
W = Split Heat Pump
T = Split Cooling

Product Family
Z = Leadership – Two Stage
X = Leadership
R = Replacement/Retail
M or B = Basic
A = Light Commercial

Family SEER
3 = 13 6 = 16 0 = 20
4 = 14 8 = 18
5 = 15 9 = 19

Split System Connections 1-6 Tons
0 = Brazed

Nominal Capacity in 000s of BTUs

Major Design Modifications

Power Supply
1 = 200-230/1/60 or 208-230/1/60
3 = 200-230/3/60
4 = 460/3/60

Secondary Function

Minor Design Modifications

Unit Parts Identifier

Air Handler

1 2 3 4 5 6 7 8 9 10 11 12 13 14 15
G A M 5 A 0 B 3 6 M 3 1 S A A

Brand
T = Better
G = Good

Product Type
A = Air Handler

Convertability
M = Multi-poise 4-way
F = Upflow Front Return, 3-way
T = 3-way

Product Tier
2 = Good, Entry Level Feature Set
4 = Better, Retail Replacement Mid Effy.
5 = Better, Entry Level High Effy., Multi-Speed
7 = Best, Retail Replacement High Effy., Variable-Speed
8 = Best, Retail Ultimate High Effy., Variable-Speed

Major Design Change

No Descriptor
0 = Air Handler / Coil

Size (Footprint)
A = 17.5 x 21.5
B = 21.0 x 21.5
C = 23.5 x 21.5

Cooling Size: Air Handler or Coil
0-9 = AH Coil - 1000 BTU's (18, 24, 30, 36, 42, 48, 60)

Airflow Type & Capability
S = Low Effy PSC, 1-5 - nom. Tonnage (cfm/ton)
M = Mid Effy Multi-Speed, 1-5 - nom. Tonnage (cfm/ton)
H = High Effy Multi-Speed, 1-5 - nom. Tonnage (cfm/ton)
V = High Effy Variable, 1-5 - nom. Tonnage (cfm/ton)

Power Supply
1 = 208-230/1/60

System Control Type
S = Standard - 24 VAC
C = CLII 13.8 VDC

Minor Design Change

Unit Parts Identifier

Gas Furnaces

1 2 3 4 5 6 7 8 9 10 11 12 13 14 15
T U D 1 B 0 8 0 A 9 H 3 1 A A

Furnace Configuration
TU = Upflow/Horizontal
TD = Downflow/Horizontal

Type
E = 80% Induced Draft Standard
D = 80% Induced Draft Premium
C = 90% Condensing Standard
X = 90% Condensing Premium
H = 95% Condensing Premium

Number of Heating Stages
1 = Single Stage
2 = Two Stage
M = Modulating

Cabinet Width
A = 14.5" Cabinet Width
B = 17.5" Cabinet Width
C = 21.0" Cabinet Width
D = 24.5" Cabinet Width

Heating Input in 1000's (BTUH)
080 = 80,000 BTUH

Major Design Change

Voltage
9 = 115 Volts / 60 Hertz / Natural Gas
A = 115 Volts / 50 Hertz / Natural Gas
C = 115 Volts / Natural Gas with Communicating System Control
F = 115 Volts / Natural Gas with Integrated Electronic Filter
D = 115 Volts / Natural Gas with Communicating System Control and Integrated Electronic Filter

Air Capacity for Cooling

Standard PSC	Variable Speed	High Efficiency
24 = 2 Tons	V3 = 3 Tons	H3 = 3 Tons
36 = 3 Tons	V4 = 4 Tons	H4 = 4 Tons
42 = 3.5 Tons	V5 = 5 Tons	H5 = 5 Tons
45 = 4 Tons		
48 = 4 Tons		
54 = 5 Tons		
60 = 5 Tons		
72 = 6 Tons		

Draft Inducer Speeds
1 = Single Speed
2 = Two Speed
V = Variable Speed

Minor Design Change

Service Digit - Not Orderable

Heat Pump/ Cooling Coils

1 2 3 4 5 6 7 8 9 10 11 12 13 14 15
4 T X C B 0 3 6 A C 3 H C A A

Refrigerant Type
4 = R-410A

Series
T = Premium (Heat Pump or Convertible Coil)
C = Standard (Cooling Only)

Coil Design
X = Direct Expansion Evaporator Coil

Coil Feature
C = Cased A Coil
A = Uncased A Coil
F = Cased Horizontal Flat Coil

Coil Width (Cased/Uncased)
A = 14.5" /13.3"
B = 17.5" / 16.3"
C = 21.0" / 19.8"
D = 24.5" / 23.3"
H = 10.5"

Refrigerant Line Coupling
0 = Brazed

Nominal Capacity in 1000's (BTUH)

Major Design Change

Efficiency
C = Standard
S = Hi Efficiency (derived from 10 SEER products)

Refrigerant Control
3 = TXV - Non-Bleed

Coil Circuitry
H = Heat Pump
C = Cooling

Airflow Configuration
A = Upflow Only
U = Upflow / Downflow
H = Horizontal Only
C = Convertible - Upflow, Downflow, Left or Right Airflow

Minor Design Change

Service Digit - Not Orderable

Product Data

Single Packaged Heat Pump
14 SEER Convertible, 2 — 5 Ton

4WCC4024A1000A
4WCC4030A1000A
4WCC4036A1000A
4WCC4042A1000A
4WCC4048A1000A
4WCC4060A1000A

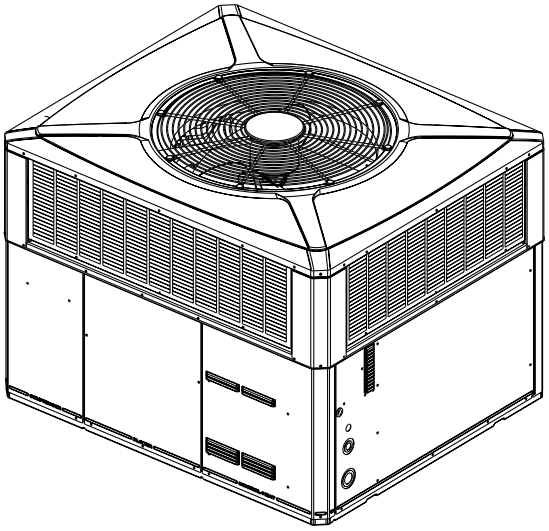

Note: *"Graphics in this document are for representation only. Actual model may differ in appearance."*

October 2014

22-1899-1A-EN

Table of Contents

Single Packaged Heat Pump System 3
Optional Equipment Listing 4
Product Specifications 6
Heater Data 9
Indoor Fan Performance (230v) 10
Wiring Diagrams. 13
Full Perimeter Roof Mounting Curb 17
Optional Equipment — Economizer 19
Optional Equipment — Outside Air Damper 20
Optional Equipment — Filter Rack 21
Outline Drawings 22
Mechanical Specifications 28

Single Packaged Heat Pump System

Trane offers a complete family of electric heat pump heating and cooling systems designed to keep you comfortable all year long, regardless of the weather, while keeping your operating costs as low as possible. A heat pump operates efficiently as both an air conditioner and a heater. In the summer, the heat pump cools your home just like any other air conditioner by pulling the heat from the inside and releasing it outdoors. In the winter, it captures the heat that is always present in the outdoor air and transfers it indoors.

Introducing the new Trane Single Heat Pump System

Single Packaged Electric Heat Pumps are easy and versatile to install.

Because cooling and heating functions are all contained in a single cabinet, Trane packaged heat pump systems are easy to install and service. It can be flush mounted beside your home at ground level or placed on the roof for horizontal or downflow installation. When connected to an optional Trane thermostat control, and air distribution ducts, you have a highly efficient, total home comfort system.

Single Packaged Electric Heat Pump Systems are unmatched in quality and reliability.

All major components on these products, including the compressor, have been designed and manufactured for maximum service. Every compressor is designed and manufactured to exacting specifications. Each design is life tested in extreme environments to ensure reliable and long lasting operation in normal applications. Each compressor has internal motor protection for added reliability.

Single Packaged Electric Heat Pump Systems provide better performance.

Our single packaged cooling/heating units offer cooling/heating efficiencies that are unmatched in the industry and provide you with a product far superior in performance than the competition.

Optional Equipment Listing

* = C or Y	
Hinged Filter Access Door (4WC*4024–036)	BAYCCDOR1A [ ]
Hinged Filter Access Door (4WC*4042–060)	BAYCCDOR2A [ ]
Roof Curb Full Perimeter (4WC*024–036A)	BAYCURB050A [ ]
Roof Curb Full Perimeter (4WC*042–060A)	BAYCURB051A [ ]
Roof Curb Utility Extension Kit (BAYCURB050A)	BAYUTIL101B [ ]
Roof Curb Utility Extension Kit (BAYCURB051A)	BAYUTIL101B [ ]
0–25% Manual Fresh Air Damper (4WCC4024–36A) (a)	BAYOSAH001A [ ]
0–25% Manual Fresh Air Damper (4WC*4042–60A) (a)	BAYOSAH002A [ ]
Motorized Fresh Air Damper (4WC*4024–036A) (a)	BAYDMPR101A [ ]
Motorized Fresh Air Damper (4WC*4042–060A) (a)	BAYDMPR102A [ ]
16″ Round Duct Adapter (2 per box) (4WC*4024–036A) (b)	BAYSQRD001A [ ]
18″ Round Duct Adapter (2 per box) (4WC*4024–060A) (b)	BAYSQRD002A [ ]
0–100% Mod Economizer w/Baro. Relief (4WC*4024–036A) (c) (d) (e)	BAYECON101B [ ]
0–100% Mod Economizer w/Baro. Relief (4WC*4042–060A)(c) (d) (e)	BAYECON102B [ ]
0–100% Horizontal Economizer (4WC*4024–36A) (c) (d)	BAYECON200B [ ]
0–100% Horizontal Economizer (4WC*4042–60A) (c) (d)	BAYECON201B [ ]
Enthalpy Control for Economizer (solid state)	BAYEENTH001A [ ]
Remote Potentiometer (ALL-BAYECON***A)	BAYSTAT023 [ ]
1″—2″ Filter Frame (4WC*4024–036A) (20 x 25 filter not included)	BAYFLTR101B [ ]
1″—2″ Filter Frame (4WC*4042–060A) (20 x 25 & 20 x 18 filters not included)	BAYFLTR201B [ ]
Head Pressure Control (Low Ambient Cool) (208/240v) Kit	BAYLOAM105A [ ]
Quick Start Kit (4WC*4–A1)	BAYQSKT300A [ ]
Crankcase Heater Scroll (4WC*4024–036) (230v)	BAYCCHT103A [ ]
Crankcase Heater Scroll (4WC*4042–060) (230v)	BAYCCHT102A [ ]
Crankcase Heater Scroll (4WC*4024–036) (230v)	BAYCCHT301A [ ]
Crankcase Heater Scroll (4WC*4042–060) (230v)	BAYCCHT302A [ ]
Adapter Curb 4WC*4024–36A to BAYCURB030,38	BAYADAP050A [ ]
Adapter Curb 4WC*4024–36A to BAYCURB033	BAYADAP051A [ ]
Adapter Curb 4WC*4042–60A to BAYCURB030,38	BAYADAP052A [ ]
Adapter Curb 4WC*4042–60A to BAYCURB033	BAYADAP053A [ ]
Adapter Curb 4WC*4042–60A to BAYCURB034	BAYADAP054A [ ]
12″ Duct Shroud Covers Horizontal 4WC*4024–060A	BAYCOVR112A [ ]
18″ Duct Shroud Covers Horizontal 4WC*4024–060A	BAYCOVR118A [ ]
Extreme Condition Mounting Kit — All BAYCURB & BAYADAP	BAYEXMK001A [ ]
Extreme Condition Mounting Kit — All BAYUTIL	BAYEXMK002B [ ]
Extreme Condition Mounting Kit — All Slab Mounts	BAYEXMK003B [ ]
Lifting Lug Kit	BAYLIFT002B [ ]
SUPPLEMENTARY HEATERS (1 PHASE)	
3.76/5.0 KW Heater (208/240V 1 PH) (4WC*4024–060A1)	BAYHTRV105F [ ]
3.76/5.0 KW Heater (208/240V 1 PH) (4WC*4024–060A1)	BAYHTRV108F [ ]
7.50/10.0 KW Heater (208/240V 1 PH) (4WC*4024–060A1)	BAYHTRV110F [ ]
11.27/15.0 KW Heater (208/240V 1 PH) (4WC*4030–060A1)	BAYHTRV115F [ ]
15.0/20.0 KW Heater (208/240V 1 PH) (4WC*4042–060A1)	BAYHTRV120F [ ]
18.78/25.0 KW Heater (208/240V 1 PH) (4WC*4042–060A1)	BAYHTRV125F [ ]

SUPPLEMENTARY HEATERS (3 PHASE)	
3.76/5.0 KW Heater (208/240V 3 PH) (4WCY4036–060A3)	BAYHTRV305F [ ]
3.76/5.0 KW Heater (208/240V 3 PH) (4WCY4036–060A3)	BAYHTRV308F [ ]
7.50/10.0 KW Heater (208/240V 3 PH) (4WCY4024–048A3)	BAYHTRV310F [ ]
11.27/15.0 KW Heater (208/240V 3 PH) (4WCY4036–060A3)	BAYHTRV315F [ ]
15.0/20.0 KW Heater (208/240V 3 PH) (4WCY4048–060A3)	BAYHTRV320F [ ]
18.78/25.0 KW Heater (208/240V 3 PH) (4WCY4048–060A1)	BAYHTRV325F [ ]
Single Power Entry Kit	BAYSPEK060F [ ]
Single Power Entry Kit	BAYSPEK061E [ ]
Single Power Entry Kit	BAYSPEK062F [ ]
Single Power Entry Kit	BAYSPEK063F [ ]
Single Power Entry Kit	BAYSPEK064E [ ]
Single Power Entry Kit	BAYSPEK065E [ ]

(a) Must use internal filter frame when economizer or fresh air kit is used.
(b) It is the responsibility of the installing dealer to properly size the ductwork for each specific application.
(c) Must use internal filter frame when economizer or fresh air kit is used.
(d) Dry bulb control standard with economizer.
(e) Downflow only.

Product Specifications

MODEL	4WCC4024A1000A	4WCC4030A1000A	4WCC4036A1000A
RATED Volts/PH/Hz	208–230/1/60	208–230/1/60	208–230/1/60
Performance Cooling BTUH [a]	24600	30400	35800
Indoor Airflow (CFM)	758	985	1114
Power Input (KW)	1.9	2.41	2.8
EER/SEER (BTU/Watt-Hr.) [b]	12.00 / 14.00	12.00 / 14.00	12.00 / 14.00
Sound Power Rating [dB(A)] [c]	66.4	70.0	69.4
PERFORMANCE HEATING			
(High Temp.) BTUH	22000	27200	32600
Power Input (KW)	1.8	2.1	2.7
(Low Temp.) BTUH	14300	16,700	21,800
Power Input (KW)	1.12	1.25	1.75
HSPF (BTUH/Watt-Hr)	8.0	8.0	8.0
POWER CONN. — V/Ph/Hz	208–230/1/60	208–230/1/60	208–230/1/60
Min. Brch. Cir. Ampacity [d]	19.4	22.6	24.4
Fuse Size — Max. (amps)	30	35	40
Fuse Size — Recmd. (amps)	30	35	40
COMPRESSOR	SCROLL	SCROLL	SCROLL
VOLTS/PH/HZ	208–230/1/60	208–230/1/60	208–230/1/60
R.L. Amps — L.R. Amps	12.8 / 58.3	14.1 / 68.2	15.4 / 77.0
OUTDOOR COIL — TYPE	SPINE FIN	SPINE FIN	SPINE FIN
Rows/F.P.I	2 / 24	2 / 24	2 / 24
Face Area (sq. ft.)	13.32	13.32	15.49
Tube Size (in.)	3/8	3/8	3/8
Refrigerant Control	EXPANSION VALVE	EXPANSION VALVE	EXPANSION VALVE
INDOOR COIL — TYPE	PLATE FIN	PLATE FIN	PLATE FIN
Rows/F.P.I	3 / 15	4/ 15	4 / 15
Face Area (sq. ft.)	3.5	3.5	3.5
Tube Size (in.)	3/8	3/8	3/8
Refrigeration Control	EXPANSION VALVE	EXPANSION VALVE	EXPANSION VALVE
Drain Conn. Size (in.)	3/4 FEMALE NPT	3/4 FEMALE NPT	3/4 FEMALE NPT
OUTDOOR FAN — TYPE	SWEPT	SWEPT	SWEPT
DIA. (IN.)	23.4	23.4	23.4
DRIVE/NO. SPEEDS	DIRECT / 3	DIRECT / 3	DIRECT / 3
CFM @ 0.0 in. w.g. [e]	2550	3270	3250
Motor — HP/R.P.M	1/12 / 850	1/6/ 842	1 / 5 / 855
Volts/Ph/Hz	208–230/1/60	208–230/1/60	208–230 / 1 / 60
F.L. Amps/L.R Amps	.54 / .82	.85 / 1.65	1.1 / 2.0
INDOOR FAN — TYPE	CONSTANT TORQUE ECM	CONSTANT TORQUE ECM	CONSTANT TORQUE ECM
Dia. x Width (in.)	10.62 X 10.68	10.62 X 10.68	10.62 X 10.68
Drive/No. Speeds	DIRECT / 3	DIRECT / 3	DIRECT / 3
CFM @ 0.0 in. w.g. [f]	SEE FAN PERF TABLE	SEE FAN PERF TABLE	SEE FAN PERF TABLE
Motor — HP/R.P.M.	1/3 / 1050	1/2 / 1050	1/2 / 1050
Volts/Ph/Hz	208–230/1/60	208–230/1/60	208–230/1/60

F.L. Amps	2.8	4	4.1
FILTER / FURNISHED	NO	NO	NO
Type Recommended	THROWAWAY	THROWAWAY	THROWAWAY
Recmd. Face Area (sq. ft) [g]	2.7	4.0	4.0
REFRIGERANT	R-410	R-410	R-410
Charge (lbs.)	5.74	7.2	7.2
CHARGING SPECIFICATIONS			
Subcooling	16°	14°	11°
DIMENSIONS	H X D X W	H X D X W	H X D X W
Crated (in.)	46 X 45 X 52	48 X 45 X 52	48 X 45 X 52
WEIGHT			
Shipping (lbs.) / Net (lbs.)	402 / 328	430 / 355	439 / 364

[a] Rated in accordance with AHRI Standard 210/240.
[b] Rated in accordance with D.O.E. test procedure.
[c] Sound Power values are not adjusted for AHRI 270–95 tonal corrections.
[d] Calculated in accordance with currently prevailing Nat'l Electrical Code.
[e] Standard Air — Dry Coil — Outdoor.
[f] Standard Air — Dry Coil — Indoor
[g] Filters must be installed in return air stream. Square footages listed are based on 300 f.p.m. face velocity. If permanent filters are used size per manufacturer's recommendation with a clean resistance of 0.05" W.C.

MODEL	4WCC4042A1000A	4WCC4048A1000A	4WCC4060A1000A
RATED Volts/PH/Hz	208–230/1/60	208–230/1/60	208–230/1/60
Performance Cooling BTUH [a]	43000	48000	58000
Indoor Airflow (CFM)	1367	1423	1787
Power Input (KW)	3.5	3.9	4.6
EER/SEER (BTU/Watt-Hr.) [b]	12.00 / 14.00	12.00 / 14.00	12.00 / 14.00
Sound Power Rating [dB(A)] [c]	71.5	72.5	77.3
PERFORMANCE HEATING			
(High Temp.) BTUH	37,600	43500	54000
Power Input (KW)	3.45	3.7	4.6
(Low Temp.) BTUH	22800	25400	34600
Power Input (KW)	1.94	2.10	2.80
HSPF (BTUH/Watt-Hr)	8.0	8.0	8.0
POWER CONN. — V/Ph/Hz	208–230/1/60	208–230/1/60	208–230/1/60
Min. Brch. Cir. Ampacity [d]	28.3	31.9	39.0
Fuse Size — Max. (amps)	45	50	60
Fuse Size — Recmd. (amps)	45	50	60
COMPRESSOR	SCROLL	SCROLL	SCROLL
VOLTS/PH/HZ	208–230/1/60	208–230/1/60	208–230/1/60
R.L. Amps — L.R. Amps	16.7 / 123.9	19.6 / 130.0	24.4/ 144.2
OUTDOOR COIL — TYPE	SPINE FIN	SPINE FIN	SPINE FIN
Rows/F.P.I	2 / 24	2 / 24	2 / 24
Face Area (sq. ft.)	20.54	20.54	22.99
Tube Size (in.)	3/8	3/8	3/8
Refrigerant Control	EXPANSION VALVE	EXPANSION VALVE	EXPANSION VALVE
INDOOR COIL — TYPE	PLATE FIN	PLATE FIN	PLATE FIN
Rows/F.P.I	3 / 15	3 / 15	4 / 15
Face Area (sq. ft.)	5.0	5.0	5.0
Tube Size (in.)	3/8	3/8	3/8

Refrigeration Control	EXPANSION VALVE	EXPANSION VALVE	EXPANSION VALVE
Drain Conn. Size (in.)	3/4 FEMALE NPT	3/4 FEMALE NPT	3/4 FEMALE NPT
OUTDOOR FAN — TYPE	SWEPT	SWEPT	SWEPT
DIA. (IN.)	28.3	28.3	28.3
DRIVE/NO. SPEEDS	DIRECT / 3	DIRECT / 3	DIRECT / 3
CFM @ 0.0 in. w.g. (e)	4400	4400	5500
Motor — HP/R.P.M	1/4 / 798	1 / 4 / 825	1/3 / 825
Volts/Ph/Hz	208–230 / 1 / 60	208–230/1/60	208–230/1/60
F.L. Amps/L.R Amps	1.51 / 3.07	1.51 / 3.07	1.7 / 3.5
INDOOR FAN — TYPE	CONSTANT TORQUE ECM	CONSTANT TORQUE ECM	CONSTANT TORQUE ECM
Dia. x Width (in.)	10.62 X 10.62	10.62 X 10.62	11.87 X 10.68
Drive/No. Speeds	DIRECT / 3	DIRECT / 3	DIRECT / 3
CFM @ 0.0 in. w.g. (f)	SEE FAN PERF TABLE	SEE FAN PERF TABLE	SEE FAN PERF TABLE
Motor — HP/R.P.M.	3/4 / 1050	3/4 / 1050	1 / 1050
Volts/Ph/Hz	208–230/1/60	208–230/1/60	208–230/1/60
F.L. Amps	6	6	6.9
FILTER / FURNISHED	NO	NO	NO
Type Recommended	THROWAWAY	THROWAWAY	THROWAWAY
Recmd. Face Area (sq. ft) (g)	5.3	5.3	5.3
REFRIGERANT	R-410	R-410	R-410
Charge (lbs.)	8.33	8.38	11.0
CHARGING SPECIFICATIONS			
Subcooling	9°	8°	6°
DIMENSIONS	H X D X W	H X D X W	H X D X W
Crated (in.)	48 X 45 X 52	50 X 47 X 62	52 X 47 X 62
WEIGHT			
Shipping (lbs.) / Net (lbs.)	548 / 444	529 / 425	594 / 490

(a) Rated in accordance with AHRI Standard 210/240.
(b) Rated in accordance with D.O.E. test procedure.
(c) Sound Power values are not adjusted for AHRI 270–95 tonal corrections.
(d) Calculated in accordance with currently prevailing Nat'l Electrical Code.
(e) Standard Air — Dry Coil — Outdoor.
(f) Standard Air — Dry Coil — Indoor
(g) Filters must be installed in return air stream. Square footages listed are based on 300 f.p.m. face velocity. If permanent filters are used size per manufacturer's recommendation with a clean resistance of 0.05" W.C.

Modular Multi-position Air Handlers

GAM5B0A18M11SA
GAM5B0A24M21SA
GAM5B0B30M21SA
GAM5B0B36M31SA
GAM5B0C42M31SA
GAM5B0C48M41SA
GAM5B0C60M51SA

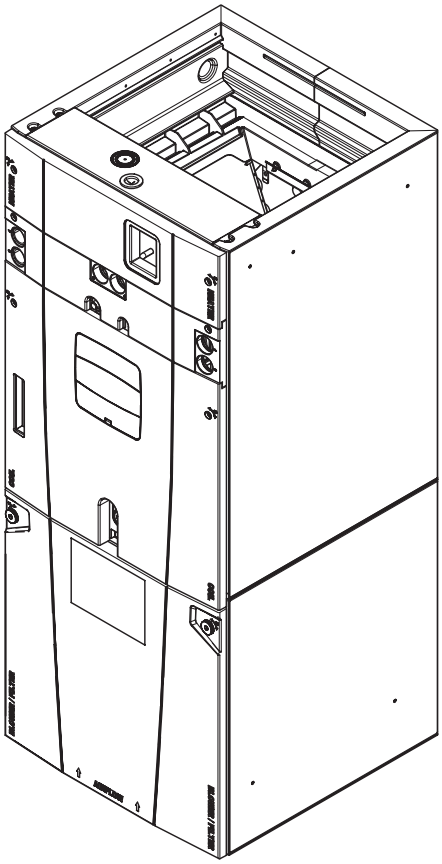

PUB. NO. 22-1845-12

Features and Benefits

- Unique Cabinet Design
  - Double Wall Foamed and Formed Cabinet System
  - Water Proof Cabinet Design
  - R-4.2 Insulating Value (Avg Insulating Value R-8.2)
  - Composite Foamed Cabinet Doors
  - Sweat Eliminating Cabinet Design
  - Loose Fiber Eliminating Cabinet Design
  - Smooth Cleanable Cabinet Design
  - 2% or Less air leakage
  - Precision Durable Door Seals
  - Modular Cabinet
- Multi-Position UP/Down Flow Horizontal Left /Right
- Phillips head door fasteners
- Side Return Option
- Refrigerant Connections
- Condensate Connections
- Premarked Conduit Connection Locations
- Vortica® Blower with Integrated Slide Deck for Easy Removal
- Polarized Plug connections on Blower
- Aluminum Coil with Integrated Slide Deck for Easy Removal
- Slide in Electric Heaters with polarized plug connections (sold as accessory)
- Polarized Plug connections for Electric Heater
- UVC light kit with safety switch and polarized plug connections (sold as accessory)
- Labeled Panels and connections
- 1 1/4" to 1" And 3/4" to 1/2" Conduit connection on Left, Right and Top
- Molded in 1" Standard Filter rail
- R-410A Thermal Expansion Valve
- R-22 conversion Thermal Expansion Valve available (sold as accessory)
- Low Voltage Pigtail Connections
- Enhanced Coil Fin Patented
- Blow Through Design
- High Efficiency ECM Motor
- Maximum Width of 23.5"
- Compact 20.8" depth with doors removed
- Integrated Horizontal Drain pans
- Soft start fan motor operation
- Built in fan delay modes
- Single Color
- Fused 24V Power
- Safety Door Switch

- **5 year warranty**
- **10-year warranty registered**
- **Optional extended warranty available**

© 2013 Trane

Contents

Features and Benefits 2
- Optional Equipment 4

Unique Cabinet Design Features and Benefits 5

General Data 6
- GAM5B0A18M11SA 6
- GAM5B0A24M21SA 6
- GAM5B0B30M21SA 6
- GAM5B0B36M31SA 6
- GAM5B0C42M31SA 6
- GAM5B0C48M41SA 7
- GAM5B0C60M51SA 7

Performance Data 8

Electrical Data 15

Field Wiring 21

Convertibility 24

Dimensions 25

Optional Equipment

OPTIONAL EQUIPMENT FOR AIR HANDLERS

Accessory Number	Description	Fits Cabinet Size
BAYEAAC05BK1A	Electric Heater, 5kW, Breaker, 24V Control, 1 Ph	A to C
BAYEAAC05LG1A	Electric Heater, 5kW, Lugs, 24V Control, 1 Ph	A to C
BAYEAAC08BK1A	Electric Heater, 8kW, Breaker, 24V Control, 1 Ph	A to C
BAYEAAC08LG1A	Electric Heater, 8kW, Lugs, 24V Control, 1 Ph	A to C
BAYEAAC10BK1A	Electric Heater, 10kW, Breaker, 24V Control, 1 Ph	A to C
BAYEAAC10LG1A	Electric Heater, 10kW, Lugs, 24V Control, 1 Ph	A to C
BAYEAAC10LG3A	Electric Heater, 10kW, Lugs, 24V Control, 3 Ph	A to C
BAYEABC15BK1A	Electric Heater, 15kW, Breaker, 24V Control, 1 Ph	B to C
BAYEABC15LG3A	Electric Heater, 15kW, Lugs, 24V Control, 3 Ph	B to C
BAYEABC20BK1A	Electric Heater, 20kW, Breaker, 24V Control, 1 Ph	B to C
BAYEACC25BK1A	Electric Heater, 25kW, Breaker, 24V Control, 1 Ph	C
BAYSUPFLGAA	Supply Duct Flange A	A
BAYSUPFLGBA	Supply Duct Flange B	B
BAYSUPFLGCA	Supply Duct Flange C	C
BAYRETFLGAA	Return Duct Flange A	A
BAYRETFLGB	Return Duct Flange B	B
BAYRETFLGCA	Return Duct Flange C	C
BAYFLR1620A	High Velocity Filter Kit, 16” X 20’ X 1” (10 filters)	A
BAYFLR2020A	High Velocity Filter Kit, 20” X 20’ X 1” (10 filters)	B
BAYFLR2220A	High Velocity Filter Kit, 22” X 20’ X 1” (10 filters)	C
TASB175SB	Plenum Stand with Integrated Sound Baffle A	A
TASB215SB	Plenum Stand with Integrated Sound Baffle B	B
TASB235SB	Plenum Stand with Integrated Sound Baffle C	C
MITISRKIT1620	Side Return Kit with 16” x 20” Filter	A to C
TASSBK175	Sound Baffle Kit 17.5” Cabinet	A
TASSBK215	Sound Baffle Kit 21.5” Cabinet	B
TASSBK235	Sound Baffle Kit 23.5” Cabinet	C
BAYSRKIT100A	Side Return Kit	A to C
BAYFRKIT175	Front Return Kit for 17.5” Cabinet	A
BAYFRKIT210	Front Return Kit for 21.0” Cabinet	B
BAYFRKIT235	Front Return Kit for 23.5” Cabinet	C
BAYHHKIT001A	Horizontal Hanger Kit	A to C
BAYUVCLK001A	UVC Lights	A to C
BAYLVKIT100A	Low Voltage Conduit Entry Kit	A to C
BAYSPEKT200A	Single Point Power Entry Kit	B to C
BAYWAAA05SC1AA	Hydronic heater, A cabinet, no control, slide-in	A
BAYWABB07SC1AA	Hydronic heater, B cabinet, no control, slide-in	B
BAYWACC08SC1AA	Hydronic heater, C cabinet, no control, slide-in	C
BAYWACC11SC1AA	Hydronic heater, C cabinet, no control, external	C
BAYATXV1836	R-22 TXV conversion kit	GAM5B0A18-24
BAYATXV4248	R-22 TXV conversion kit	GAM5B0B30-36,GAM5B0C42
BAYATXV6060	R-22 TXV conversion kit	GAM5B0C48-60

Unique Cabinet Design Features and Benefits

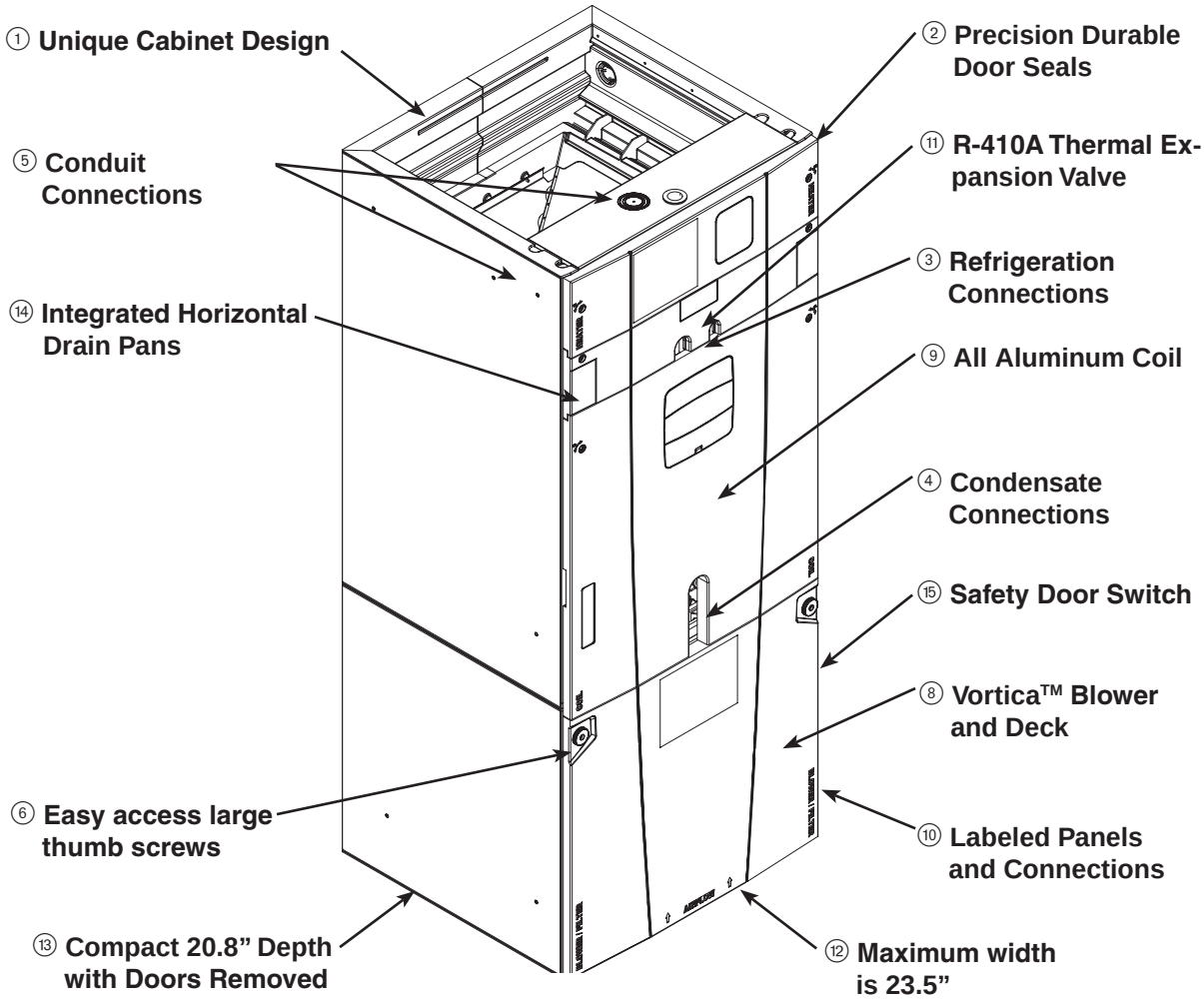

① **Unique Cabinet Design**
- Double wall foamed cabinet system
- Waterproof Cabinet Design
- R-4.2 Insulating Value (Avg Insulating Value R-8.2)
- Composite Foamed Cabinet Doors
- Sweat Eliminating Cabinet Design
- Loose Fiber Eliminating Design
- Smooth Cleanable Cabinet Design

② **Precision Durable Door Seals**
③ **Refrigeration Connections**
④ **Condensate Connections**
⑤ **Conduit Connections** - Conduit Connections on Left, Right, and Top
⑥ **Easy access large thumb screws**
⑧ **Vortica™ Blower and Deck** - Polarized Plug on Blower

⑨ **All Aluminum Coil**
- Integrated Slide Deck for Easy Removal
- Patented Enhanced Coil Fin

⑩ **Labeled Panels and Connections**
⑪ **R-410A Thermal Expansion Valve**
⑫ **Maximum width is 23.5”**
⑬ **Compact 20.8” Depth with Doors Removed**
⑭ **Integrated Horizontal Drain Pans**
⑮ **Safety Door Switch** - Fused 24V Power
⑯ **Modular Cabinet**

General Data

PRODUCT SPECIFICATIONS			
MODEL	**GAM5B0A18M11SA**	**GAM5B0A24M21SA**	**GAM5B0B30M21SA**
RATED VOLTS/PH/HZ.	208-230/1/60	208-230/1/60	208-230/1/60
RATINGS ①	See O.D. Specifications	See O.D. Specifications	See O.D. Specifications
INDOOR COIL — Type	Plate Fin	Plate Fin	Plate Fin
Rows — F.P.I.	3 - 14	3 - 14	3 - 14
Face Area (sq. ft.)	3.67	3.67	4.13
Tube Size (in.)	3/8	3/8	3/8
Refrigerant Control	TXV	TXV	TXV
Drain Conn. Size (in.) ②	3/4 NPT	3/4 NPT	3/4 NPT
DUCT CONNECTIONS	See Outline Drawing	See Outline Drawing	See Outline Drawing
INDOOR FAN — Type	Centrifugal	Centrifugal	Centrifugal
Diameter-Width (In.)	11 X 8	11 X 8	11 X 10
No. Used	1	1	1
Drive - No. Speeds	Direct - 5	Direct - 5	Direct - 5
CFM vs. in. w.g.	See Fan Performance Table	See Fan Performance Table	See Fan Performance Table
No. Motors — H.P.	1 - 1/3	1 - 1/3	1 - 1/3
Motor Speed R.P.M.	1050	1050	1050
Volts/Ph/Hz	208-230/1/60	208-230/1/60	208-230/1/60
F.L. Amps	2.8	2.8	2.8
FILTER			
Filter Furnished?	No	No	No
Type Recommended	Throwaway	Throwaway	Throwaway
No.-Size-Thickness	1 - 16 X 20 - 1 in.	1 - 16 X 20 - 1 in.	1 - 20 X 20 - 1 in.
REFRIGERANT	**R-410A**	**R-410A**	**R-410A**
Ref. Line Connections	Brazed	Brazed	Brazed
Coupling or Conn. Size — in. Gas	3/4	3/4	3/4
Coupling or Conn. Size — in. Liq.	3/8	3/8	3/8
DIMENSIONS	H x W x D	H x W x D	H x W x D
Crated (In.)	51-3/8 x 20-1/2 x 25-3/4	51-3/8 x 20-1/2 x 25-3/4	53 x 24-1/4 x 25-3/4
Uncrated	49-7/8 x 17-1/2 x 21-3/4	49-7/8 x 17-1/2 x 21-3/4	51-1/2 x 21-1/4 x 21-3/4
WEIGHT			
Shipping (Lbs.)/Net (Lbs.)	126/120	126/120	140/132

PRODUCT SPECIFICATIONS		
MODEL	**GAM5B0B36M31SA**	**GAM5B0C42M31SA**
RATED VOLTS/PH/HZ.	208-230/1/60	208-230/1/60
RATINGS ①	See O.D. Specifications	See O.D. Specifications
INDOOR COIL — Type	Plate Fin	Plate Fin
Rows — F.P.I.	3 - 14	4 - 14
Face Area (sq. ft.)	5.04	5.04
Tube (in.)	3/8	3/8
Refrigerant Control	TXV	TXV
Drain Conn. Size (in.) ②	3/4 NPT	3/4 NPT
DUCT CONNECTIONS	See Outline Drawing	See Outline Drawing
INDOOR FAN — Type	Centrifugal	Centrifugal
Diameter-Width (In.)	11 X 10	11 X 10
No. Used	1	1
Drive - No. Speeds	Direct - 5	Direct - 5
CFM vs. in. w.g.	See Fan Performance Table	See Fan Performance Table
No. Motors — H.P.	1 - 1/2	1 - 1/2
Motor Speed R.P.M.	1050	1050
Volts/Ph/Hz	208-230/1/60	208-230/1/60
F.L. Amps	4.1	4.1
FILTER		
Filter Furnished?	No	No
Type Recommended	Throwaway	Throwaway
No.-Size-Thickness	1 - 20 X 20 - 1 in.	1 - 22 X 20 - 1 in.
REFRIGERANT	**R-410A**	**R-410A**
Ref. Line Connections	Brazed	Brazed
Coupling or Conn. Size — in. Gas	7/8	7/8
Coupling or Conn. Size — in. Liq.	3/8	3/8
DIMENSIONS	H x W x D	H x W x D
Crated (In.)	57-1/4 x 24-1/4 x 25-3/4	58-1/2 x 27-1/2 x 25-3/4
Uncrated	55-3/4 x 21-1/4 x 21-3/4	56-7/8 x 23-1/2 x 21-3/4
WEIGHT		
Shipping (Lbs.)/Net (Lbs.)	150/142	163/153

① These Air Handlers are A.H.R.I. certified with various Split System Air Conditioners and Heat Pumps (AHRI STANDARD 210/240). Refer to the Split System Outdoor Unit Product Data Guides for performance data.

② 3/4" Male Plastic Pipe (Ref.: ASTM 1785-76)

General Data

PRODUCT SPECIFICATIONS		
MODEL	**GAM5B0C48M41SA**	**GAM5B0C60M51SA**
RATED VOLTS/PH/HZ.	208-230/1/60	208-230/1/60
RATINGS ①	See O.D. Specifications	See O.D. Specifications
INDOOR COIL — Type	Plate Fin	Plate Fin
Rows — F.P.I.	4 - 14	4 - 14
Face Area (sq. ft.)	5.96	5.96
Tube Size (in.)	3/8	3/8
Refrigerant Control	TXV	TXV
Drain Conn. Size (in.) ②	3/4 NPT	3/4 NPT
DUCT CONNECTIONS	See Outline Drawing	See Outline Drawing
INDOOR FAN — Type	Centrifugal	Centrifugal
Diameter-Width (In.)	11 X 10	11 X 10
No. Used	1	1
Drive - No. Speeds	Direct - 5	Direct - 5
CFM vs. in. w.g.	See Fan Performance Table	See Fan Performance Table
No. Motors — H.P.	1 - 3/4	1 - 1
Motor Speed R.P.M.	1050	1050
Volts/Ph/Hz	208-230/1/60	208-230/1/60
F.L. Amps	6.0	7.6
FILTER		
Filter Furnished?	No	No
Type Recommended	Throwaway	Throwaway
No.-Size-Thickness	1 - 22 X 20 - 1 in.	1 - 22 X 20 - 1 in.
REFRIGERANT	**R-410A**	**R-410A**
Ref. Line Connections	Brazed	Brazed
Coupling or Conn. Size — in. Gas	7/8	7/8
Coupling or Conn. Size — in. Liq.	3/8	3/8
DIMENSIONS	H x W x D	H x W x D
Crated (In.)	63-1/4 x 27-1/2 x 25-3/4	63-1/4 x 27-1/2 x 25-3/4
Uncrated	61-3/4 x 23-1/2 x 21-3/4	61-3/4 x 23-1/2 x 21-3/4
WEIGHT		
Shipping (Lbs.) / Net (Lbs.)	176/166	180/170

① These Air Handlers are A.H.R.I. certified with various Split System Air Conditioners and Heat Pumps (AHRI STANDARD 210/240). Refer to the Split System Outdoor Unit Product Data Guides for performance data.

② 3/4" Male Plastic Pipe (Ref.: ASTM 1785-76)

Performance Data

GAM5B0A18 AIRFLOW PERFORMANCE TABLE

AIRFLOW PERFORMANCE										
GAM5B0A18M11SA										
EXTERNAL STATIC (in w.g)	AIRFLOW (CFM)									
	Speed Taps - 230 VOLTS					Speed Taps - 208 VOLTS				
	5	4 †	3	2	1	5	4 †	3	2	1
0	1081	977	930	862	556	1078	974	927	858	553
0.1	1044	922	850	806	379	1038	916	844	800	373
0.2	995	880	787	702	202	987	871	778	693	193
0.3	956	830	738	621	-	944	819	727	610	-
0.4	914	788	692	562	-	900	774	677	548	-
0.5	872	749	646	502	-	855	732	629	485	-
0.6	838	707	590	445	-	819	687	570	425	-
0.7	802	650	528	389	-	779	628	505	367	-
0.8	755	598	478	327	-	730	573	453	302	-
0.9	708	539	420	-	-	680	512	392	-	-

NOTES:
1. Values are with wet coil and without filters.
2. Contact your particular filter manufacturer for pressure drop data.
3. Electric heater pressure drop is negligible and is included within the airflow data.
4. Tap 1 is an continuous fan speed tap for single stage systems. Airflow adjustment is required for 2 stage systems. See Airflow adjustment section.
5. † Factory Setting

GAM5B0A18M11SA MINIMUM HEATER AIRFLOW CFM		
Heater	Minimum Air Speed Tap	
	Without Heat Pump	With Heat Pump
BAYEAAC05BK1AA BAYEAAC05LG1AA	Tap 3	Tap 4
BAYEAAC08BK1AA BAYEAAC08LG1AA	Tap 3	Tap 4
BAYEAAC10BK1AA BAYEAAC10LG1AA	Tap 3 ①	Tap 5 ①
BAYEAAC10LG3AA	Tap 5	Tap 5 ②
BAYEABC15BK1AA	-	-
BAYEABC20BK1AA	-	-

① Heater not qualified for downflow installations
② Approved for 240 V only

Note: *Heating and cooling speeds are the same, factory set at Speed Tap #4.*

Note: *A "G" only signal from the comfort control will run the blower at a lower speed, factory set at Speed Tap #1. See the Sequence of Operation for additional information.*

Note: *Speed Tap 1 is NOT used for two stage systems. Two stage systems will require an airflow adjustment.*

Performance Data

GAM5B0A24 AIRFLOW PERFORMANCE TABLE

AIRFLOW PERFORMANCE										
GAM5B0A24M21SA										
EXTERNAL STATIC (in w.g)	AIRFLOW (CFM)									
	Speed Taps - 230 VOLTS					Speed Taps - 208 VOLTS				
	5	4 †	3	2	1	5	4 †	3	2	1
0	1081	977	937	928	579	1078	974	933	925	576
0.1	1044	922	868	844	418	1038	916	863	838	412
0.2	995	880	817	777	306	987	871	808	768	298
0.3	956	830	767	729	-	944	819	756	717	-
0.4	914	788	719	682	-	900	774	705	668	-
0.5	872	749	680	635	-	855	732	663	618	-
0.6	838	707	628	577	-	819	687	609	557	-
0.7	802	650	566	515	-	779	628	544	492	-
0.8	755	598	511	467	-	730	573	486	442	-
0.9	708	539	460	407	-	680	512	432	-	-

NOTES:
1. Values are with wet coil and without filters.
2. Contact your particular filter manufacturer for pressure drop data.
3. Electric heater pressure drop is negligible and is included within the airflow data.
4. Tap 1 is an continuous fan speed tap for single stage systems. Airflow adjustment is required for 2 stage systems. See Airflow adjustment section.
5. † Factory Setting

GAM5B0A24M21SA MINIMUM HEATER AIRFLOW CFM		
Heater	Minimum Air Speed Tap	
	Without HP	With HP
BAYEAAC05BK1AA BAYEAAC05LG1AA	Tap 3	Tap 4
BAYEAAC08BK1AA BAYEAAC08LG1AA	Tap 3	Tap 4
BAYEAAC10BK1AA BAYEAAC10LG1AA	Tap 3 ①	Tap 5 ①
BAYEAAC10LG3AA	Tap 5	Tap 5 ②
BAYEABC15BK1AA	-	-
BAYEABC20BK1AA	-	-

① Heater not qualified for downflow installations
② Approved for 240 V only

Note: *Heating and cooling speeds are the same, factory set at Speed Tap #4.*

Note: *A "G" only signal from the comfort control will run the blower at a lower speed, factory set at Speed Tap #1. See the Sequence of Operation for additional information.*

Note: *Speed Tap 1 is NOT used for two stage systems. Two stage systems will require an airflow adjustment.*

Performance Data

GAM5B0B30 AIRFLOW PERFORMANCE TABLE

AIRFLOW PERFORMANCE										
GAM5B0B30M21SA										
EXTERNAL STATIC (in w.g)	AIRFLOW (CFM)									
	Speed Taps - 230 VOLTS					Speed Taps - 208 VOLTS				
	5	4 †	3	2	1	5	4 †	3	2	1
0	1282	1150	979	856	678	1279	1146	976	853	675
0.1	1238	1094	931	797	482	1232	1088	925	791	476
0.2	1186	1047	863	725	285	1177	1039	854	716	276
0.3	1141	986	803	647	88	1130	975	791	636	77
0.4	1091	935	721	555	-	1076	921	707	540	-
0.5	1033	866	649	461	-	1016	849	632	444	-
0.6	977	799	554	388	-	958	779	534	369	-
0.7	914	732	490	318	-	892	710	468	296	-
0.8	846	646	429	-	-	821	621	404	-	-
0.9	771	587	376	-	-	743	560	348	-	-

NOTES:
1. Values are with wet coil and without filters.
2. Contact your particular filter manufacturer for pressure drop data.
3. Electric heater pressure drop is negligible and is included within the airflow data.
4. Tap 1 is an continuous fan speed tap for single stage systems. Airflow adjustment is required for 2 stage systems. See Airflow adjustment section.
5. † Factory Setting

GAM5B0B30M21SA MINIMUM HEATER AIRFLOW CFM		
Heater	Minimum Air Speed Tap	
	Without HP	With HP
BAYEAAC05BK1AA BAYEAAC05LG1AA	Tap 2	Tap 3
BAYEAAC08BK1AA BAYEAAC08LG1AA	Tap 3	Tap 4
BAYEAAC10BK1AA BAYEAAC10LG1AA	Tap 3	Tap 4
BAYEAAC10LG3AA	Tap 3 ①	Tap 4 ①
BAYEABC15BK1AA	Tap 4	Tap 5
BAYEABC15LG3AA	Tap 4	Tap 5
BAYEABC20BK1AA	-	-
BAYEACC25BK1AA	-	-
① 208 V not approved for upflow installations		

Note: *Heating and cooling speeds are the same, factory set at Speed Tap #4.*

Note: *A "G" only signal from the comfort control will run the blower at a lower speed, factory set at Speed Tap #1. See the Sequence of Operation for additional information.*

Note: *Speed Tap 1 is NOT used for two stage systems. Two stage systems will require an airflow adjustment.*

Performance Data

GAM5B0B36 AIRFLOW PERFORMANCE TABLE

AIRFLOW PERFORMANCE										
GAM5B0B36M31SA										
EXTERNAL STATIC (in w.g)	AIRFLOW (CFM)									
	Speed Taps - 230 VOLTS					Speed Taps - 208 VOLTS				
	5	4 †	3	2	1	5	4 †	3	2	1
0	1438	1387	1197	1013	732	1435	1383	1194	1009	729
0.1	1394	1340	1143	945	552	1388	1334	1137	939	546
0.2	1350	1299	1090	892	413	1341	1291	1082	884	404
0.3	1301	1245	1031	817	305	1289	1233	1019	806	293
0.4	1253	1197	975	751	209	1239	1183	960	737	195
0.5	1205	1151	917	651	-	1188	1134	900	634	-
0.6	1155	1094	837	578	-	1136	1075	817	559	-
0.7	1099	1032	766	499	-	1077	1010	744	476	-
0.8	1039	972	691	453	-	1014	946	666	-	-
0.9	964	889	633	409	-	936	861	605	-	-

NOTES:
1. Values are with wet coil and without filters.
2. Contact your particular filter manufacturer for pressure drop data.
3. Electric heater pressure drop is negligible and is included within the airflow data.
4. Tap 1 is an continuous fan speed tap for single stage systems. Airflow adjustment is required for 2 stage systems. See Airflow adjustment section.
5. † Factory Setting

GAM5B0B36M31SA MINIMUM HEATER AIRFLOW CFM		
Heater	Minimum Air Speed Tap	
	Without HP	With HP
BAYEAAC05BK1AA BAYEAAC05LG1AA	Tap 2	Tap 3
BAYEAAC08BK1AA BAYEAAC08LG1AA	Tap 3	Tap 4
BAYEAAC10BK1AA BAYEAAC10LG1AA	Tap 4	Tap 5
BAYEAAC10LG3AA	Tap 4	Tap 5
BAYEABC15BK1AA	Tap 4	Tap 5
BAYEABC15LG3AA	Tap 4	Tap 5
BAYEABC20BK1AA	-	-
BAYEACC25BK1AA	-	-

Note: *Heating and cooling speeds are the same, factory set at Speed Tap #4.*

Note: *A "G" only signal from the comfort control will run the blower at a lower speed, factory set at Speed Tap #1. See the Sequence of Operation for additional information.*

Note: *Speed Tap 1 is NOT used for two stage systems. Two stage systems will require an airflow adjustment.*

Performance Data

GAM5B0C42 AIRFLOW PERFORMANCE TABLE

AIRFLOW PERFORMANCE										
GAM5B0C42M31SA										
EXTERNAL STATIC (in w.g)	AIRFLOW (CFM)									
	Speed Taps - 230 VOLTS					Speed Taps - 208 VOLTS				
	5	4 †	3	2	1	5	4 †	3	2	1
0	1644	1575	1401	1266	752	1641	1572	1398	1263	749
0.1	1596	1525	1346	1215	665	1590	1519	1340	1209	659
0.2	1550	1480	1300	1157	569	1542	1471	1291	1148	560
0.3	1509	1437	1252	1110	492	1497	1425	1241	1099	480
0.4	1463	1391	1205	1058	384	1449	1377	1191	1043	370
0.5	1420	1345	1151	980	327	1403	1328	1134	963	310
0.6	1376	1301	1085	917	259	1356	1282	1066	898	239
0.7	1332	1251	1020	865	-	1310	1228	998	842	-
0.8	1271	1179	969	813	-	1246	1154	944	788	-
0.9	1199	1119	924	747	-	1171	1091	897	719	-

NOTES:
1. Values are with wet coil and without filters.
2. Contact your particular filter manufacturer for pressure drop data.
3. Electric heater pressure drop is negligible and is included within the airflow data.
4. Tap 1 is an continuous fan speed tap for single stage systems. Airflow adjustment is required for 2 stage systems. See Airflow adjustment section.
5. † Factory Setting

GAM5B0C42M31SA MINIMUM HEATER AIRFLOW CFM		
Heater	Minimum Air Speed Tap	
	Without HP	With HP
BAYEAAC05BK1AA BAYEAAC05LG1AA	Tap 2	Tap 3
BAYEAAC08BK1AA BAYEAAC08LG1AA	Tap 2	Tap 3
BAYEAAC10BK1AA BAYEAAC10LG1AA	Tap 2	Tap 3
BAYEAAC10LG3AA	Tap 2	Tap 3
BAYEABC15BK1AA	Tap 3	Tap 4
BAYEABC15LG3AA	Tap 3	Tap 4
BAYEABC20BK1AA	-	-
BAYEACC25BK1AA	-	-

Note: *Heating and cooling speeds are the same, factory set at Speed Tap #4.*

Note: *A "G" only signal from the comfort control will run the blower at a lower speed, factory set at Speed Tap #1. See the Sequence of Operation for additional information.*

Note: *Speed Tap 1 is NOT used for two stage systems. Two stage systems will require an airflow adjustment.*

Performance Data

GAM5B0C48 AIRFLOW PERFORMANCE TABLE

AIRFLOW PERFORMANCE										
GAM5B0C48M41SA										
EXTERNAL STATIC (in w.g)	AIRFLOW (CFM)									
	Speed Taps - 230 VOLTS					Speed Taps - 208 VOLTS				
	5	4 †	3	2	1	5	4 †	3	2	1
0	1913	1770	1694	1593	866	1910	1767	1691	1590	863
0.1	1874	1730	1653	1547	791	1868	1724	1647	1541	785
0.2	1834	1690	1611	1505	699	1825	1681	1602	1496	690
0.3	1791	1646	1567	1456	620	1780	1635	1556	1445	609
0.4	1748	1600	1521	1410	537	1734	1586	1506	1396	522
0.5	1708	1556	1476	1367	453	1691	1539	1459	1350	437
0.6	1668	1516	1436	1326	370	1648	1496	1416	1306	351
0.7	1629	1475	1394	1283	-	1607	1452	1372	1260	-
0.8	1588	1435	1352	1236	-	1563	1410	1327	1211	-
0.9	1541	1390	1304	1183	-	1513	1362	1276	1156	-

NOTES:
1. Values are with wet coil and without filters.
2. Contact your particular filter manufacturer for pressure drop data.
3. Electric heater pressure drop is negligible and is included within the airflow data.
4. Tap 1 is an continuous fan speed tap for single stage systems. Airflow adjustment is required for 2 stage systems. See Airflow adjustment section.
5. † Factory Setting

GAM5B0C48M41SA MINIMUM HEATER AIRFLOW CFM		
Heater	Minimum Air Speed Tap	
	Without HP	With HP
BAYEAAC05BK1AA BAYEAAC05LG1AA	Tap 2	Tap 3
BAYEAAC08BK1AA BAYEAAC08LG1AA	Tap 2	Tap 3
BAYEAAC10BK1AA BAYEAAC10LG1AA	Tap 2	Tap 3
BAYEAAC10LG3AA	Tap 2	Tap 3
BAYEABC15BK1AA	Tap 3	Tap 4
BAYEABC15LG3AA	Tap 3	Tap 4
BAYEABC20BK1AA	Tap 3	Tap 4
BAYEACC25BK1AA	Tap 4	Tap 5

Note: *Heating and cooling speeds are the same, factory set at Speed Tap #4.*

Note: *A "G" only signal from the comfort control will run the blower at a lower speed, factory set at Speed Tap #1. See the Sequence of Operation for additional information.*

Note: *Speed Tap 1 is NOT used for two stage systems. Two stage systems will require an airflow adjustment.*

Performance Data

GAM5B0C60 AIRFLOW PERFORMANCE TABLE

AIRFLOW PERFORMANCE										
GAM5B0C60M51SA										
EXTERNAL STATIC (in w.g)	AIRFLOW (CFM)									
	Speed Taps - 230 VOLTS					Speed Taps - 208 VOLTS				
	5	4 †	3	2	1	5	4 †	3	2	1
0	2327	2020	1914	1819	1125	2324	2017	1910	1816	1122
0.1	2285	1980	1873	1780	990	2279	1974	1867	1774	984
0.2	2237	1944	1835	1740	831	2228	1935	1826	1731	822
0.3	2182	1908	1800	1705	600	2171	1896	1789	1693	589
0.4	2125	1869	1756	1659	331	2111	1854	1742	1645	317
0.5	2062	1830	1717	1620	249	2045	1813	1700	1603	232
0.6	1995	1747	1664	1575	187	1975	1727	1644	1555	168
0.7	1922	1707	1629	1540	-	1899	1685	1607	1518	-
0.8	1844	1673	1594	1502	-	1819	1648	1569	1477	-
0.9	1761	1629	1553	1464	-	1733	1601	1525	1436	-

NOTES:
1. Values are with wet coil and without filters.
2. Contact your particular filter manufacturer for pressure drop data.
3. Electric heater pressure drop is negligible and is included within the airflow data.
4. Tap 1 is an continuous fan speed tap for single stage systems. Airflow adjustment is required for 2 stage systems. See Airflow adjustment section.
5. If the air handler is applied in downflow or horizontal configurations, the airflow should not exceed 2000 CFM. Airflow above 2000 CFM could result in water blow-off.
6. † Factory Setting

GAM5B0C60M51SA MINIMUM HEATER AIRFLOW CFM		
Heater	Minimum Air Speed Tap	
	Without HP	With HP
BAYEAAC05BK1AA BAYEAAC05LG1AA	Tap 2	Tap 3
BAYEAAC08BK1AA BAYEAAC08LG1AA	Tap 2	Tap 3
BAYEAAC10BK1AA BAYEAAC10LG1AA	Tap 2	Tap 3
BAYEAAC10LG3AA	Tap 2	Tap 3
BAYEABC15BK1AA	Tap 3	Tap 4
BAYEABC15LG3AA	Tap 3	Tap 4
BAYEABC20BK1AA	Tap 3	Tap 4
BAYEACC25BK1AA	Tap 4	Tap 5 ①②

① If the air handler is applied in downflow or horizontal configurations, the airflow should not exceed 2000 CFM. Airflow above 2000 CFM could result in water blow-off.
② Tap 5 can be used but only when the external static pressure is .6" or above.

Note: *Heating and cooling speeds are the same, factory set at Speed Tap #4.*

Note: *A "G" only signal from the comfort control will run the blower at a lower speed, factory set at Speed Tap #1. See the Sequence of Operation for additional information.*
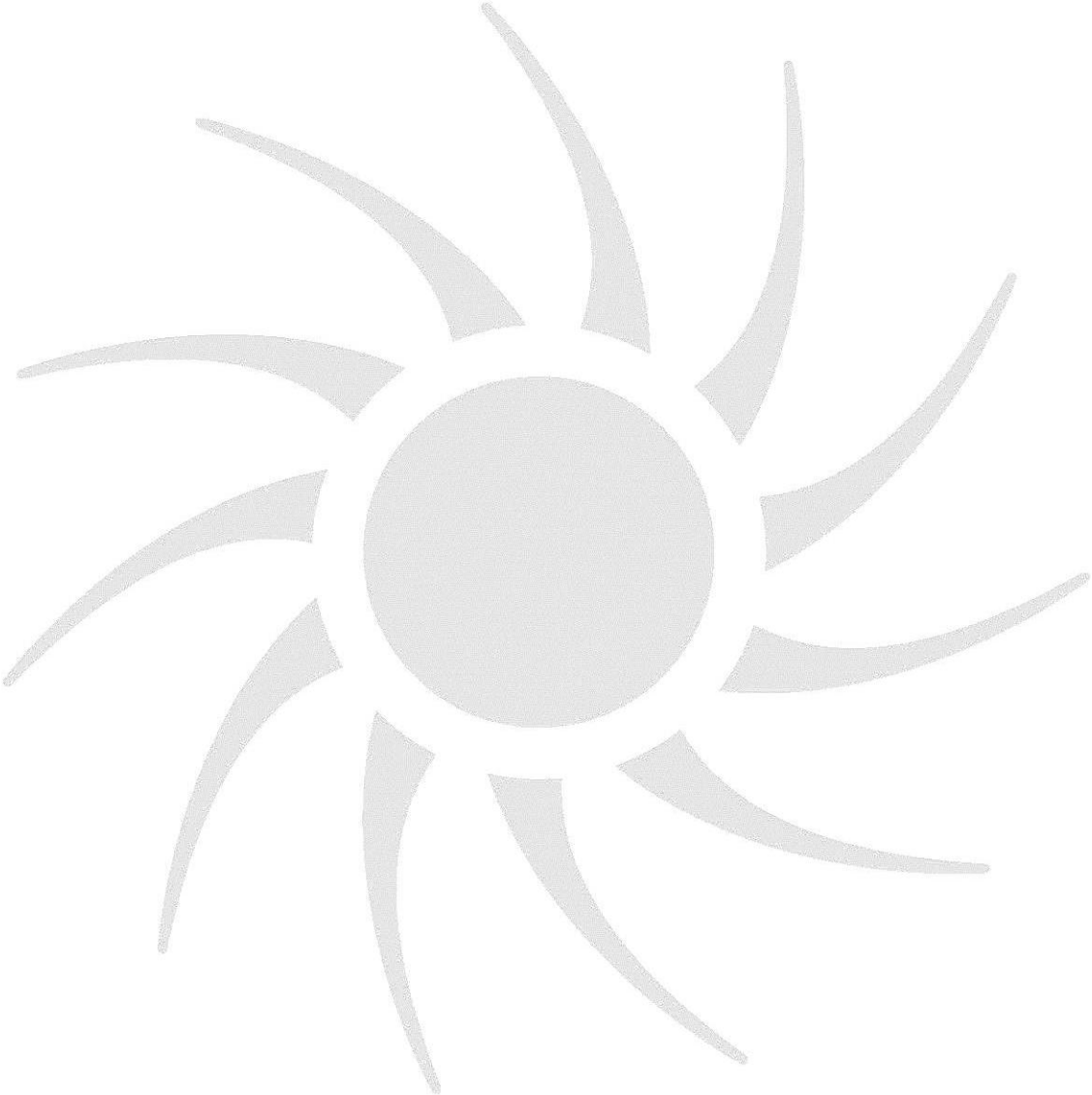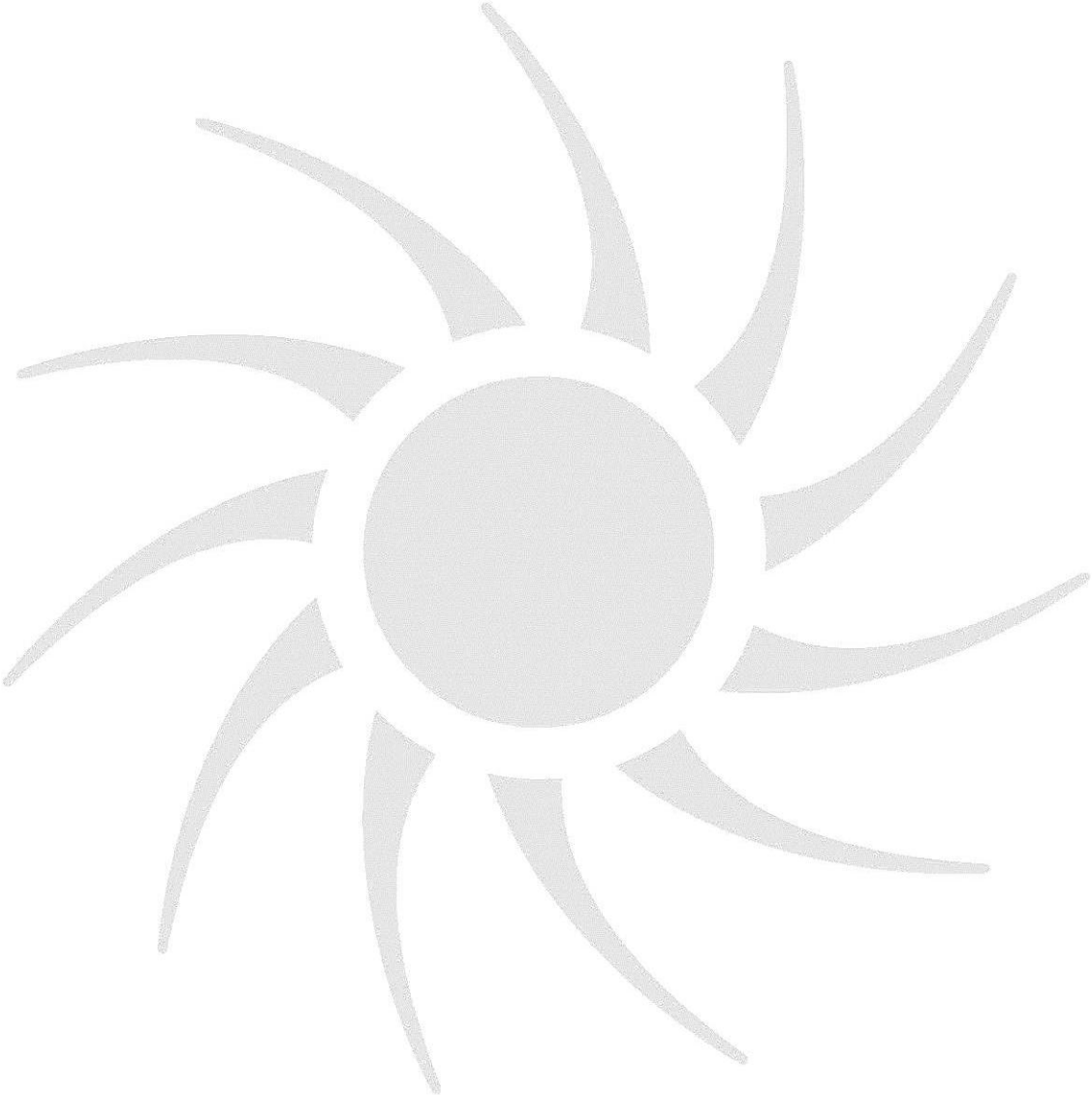
Note: *Speed Tap 1 is NOT used for two stage systems. Two stage systems will require an airflow adjustment.*